maggi engineering

WOODWORKING MACHINERY

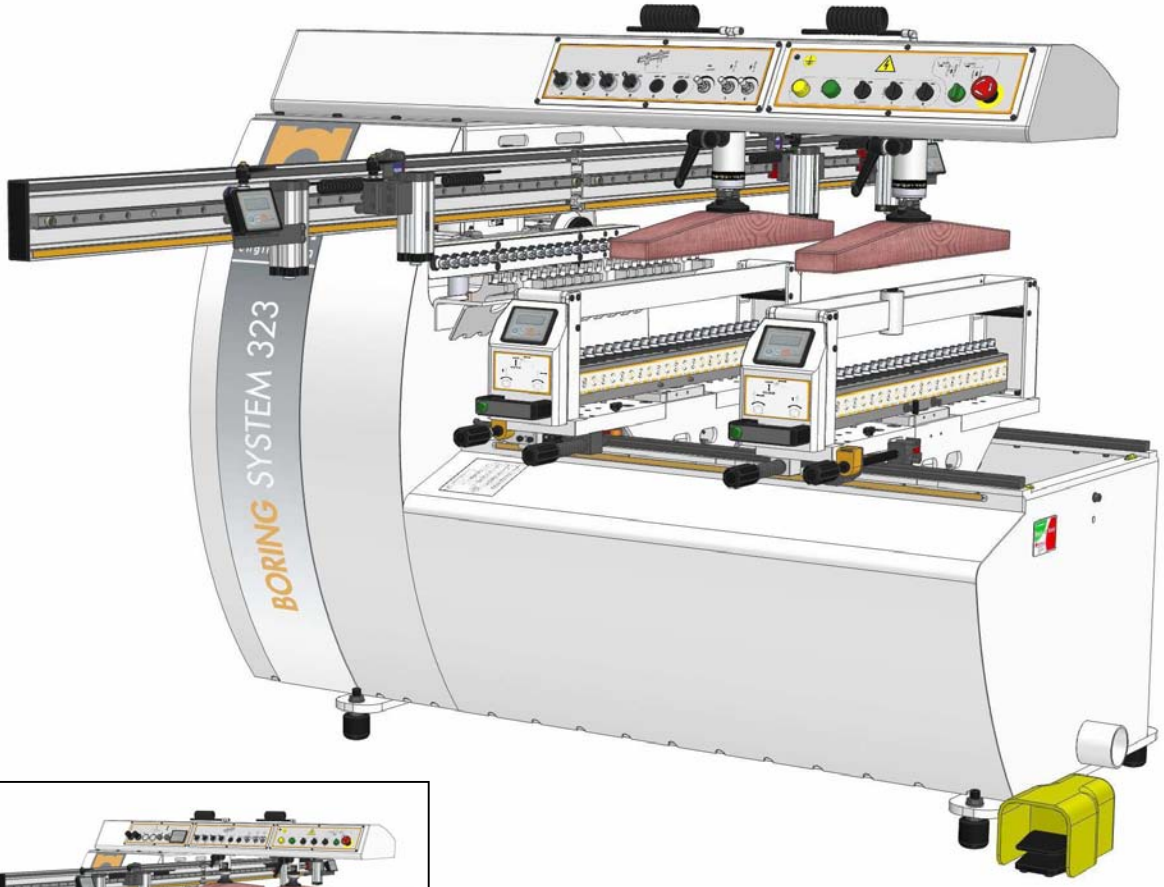

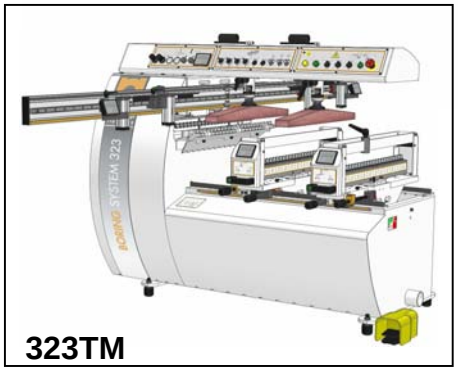

Always keep this manual together with the machine

USA

MAN. COD. 00008272 EDITION 09/2007

323 MACHINE CODE 16830201
323TM MACHINE CODE 16835201

CE

BORING SYSTEM 323/323TM

USE AND MAINTENANCE MANUAL

Page intentionally left blank

GENERAL INFORMATION

MANUFACTURER	**MAGGI ENGINEERING**
MANUFACTURER'S ADDRESS	**Via delle Regioni, 299 50052 CERTALDO (FI) ITALIA**
MACHINE NAME	**16830201 BORING SYSTEM 323** **16835201 BORING SYSTEM 323TM**
YEAR OF MANUFACTURE	
POWER SUPPLY	See rating plate on machine

MACHINE N°

Adesivo targa matricola

Page intentionally left blank

WE WISH TO THANK YOU FOR CHOOSING ONE OF OUR PRODUCTS

All the information, advices and important warnings for a correct use of the machine, have been inserted into this manual. This manual also contains the rules for a correct periodical maintenance to keep this machine in perfect efficiency. We suggest that all the chapters of this manual are thoroughly read before you use the machine for the very first time.

INTRODUCTION

Some information and illustrations in this manual may differ from the machine in your possession, since all the configurations inherent in the machine complete with all the OPTIONALS are described and illustrated. Therefore, refer only to that information strictly connected with the machine configuration you have purchased. The manufacturer in his pursuit of a policy of costant development and updating of the product may make any modifications without any prior notice.

This manual has been drawn up exclusively for our customers' use, guaranteeing that at the date of issue it constitutes the latest update of the documentation related to use of the product. Use of this manual is on full responsibility of the user. The manufacturer does not grant any further guarantee for any imperfections, incompleteness and/or operating difficulties, expressly excluding any responsibility for direct or indirect damage deriving from use of this documentation. MAGGI ENGINEERING reserves the right to make any modifications to the product described in this manual at any time without prior notice.

All reproduction rights are reserved by MAGGI ENGINEERING.

INDEX

1. DECLARATION OF CONFORMITY
2. SAFETY RULES AND GENERAL INFORMATION
2.1 *RECOMMENDATION FOR USE AND MAINTENANCE*
2.2 *MACHINE IDENTIFICATIONS*
3. OPERATIVE NOTES
4. MACHINE DESCRIPTION
4.1 *USABLE TOOLS*
4.2 *MACHINE PARTS*
5. EQUIPMENT, ACCESSORIES
6. SAFETY PROTECTION DEVICES
7. INDIVIDUAL PROTECTION DEVICES
8. TECHNICAL DATA
9. INTENDED USE
9.1 *MATERIALS*
9.2 *IMPROPER USE*
10. TRASPORT
11. OVERALL DIMENSION
12. INSTALLATION
12.1 PLACING THE MACHINE
12.2 *LEVELLING*
13. WORKING AREA
14. ASSEMBLING AND PRELIMINARY PREPARATION FOR WORKING
15. ASSEMBLING AND CHECKING PROCEDURE
16 MACHINE CONNECTIONS TO EXTERNAL POWER SUPPLY
16.1 *CONNECTION TO ELECTRICAL POWER SUPPLY*
16.2 *PNEUMATIC CONNECTION*
16.3 *EXHAUST FAN CONNECTION*
16.4 *CONTROL DEVICES*
16.5 *WORKING RULES*
17. DRILLING SETUP
17.1 *WORKING RULES*
17.2 *HORIZONTAL / VERTICAL SIMULTANEOUS BORING SYSTEM (SYNCHRONOUS CYCLE)*
17.3 *HORIZONTAL / VERTICAL CROSSING BORING CYCLE (ALTERNATE CYCLE)*
17.4 *NOTES ON STARTING DEVICE*
18. CHECK UP AND ADJUSTEMENTS
18.1 ELECTRICAL INSULATION PROCEDURE
18.2 *PRELIMINARY CHECK UP*
18.3 *DRILLING DEPTH*
18.4 *ADJUSTING THE PARALLELISM OF SPINDLE HEADS*
19. WORKING EXAMPLES
20. MAINTENANCE
20.1 *ORDINARY MAINTENANCE*
20.2 *CLEANING OF THE MACHINE (DAILY)*
20.3 *CLEANING THE GUIDES (WEEKLY)*
20.4 *EXTRAORDINARY MAINTENANCE*
21. COMMON FAILURES AND REMEDIES
21.1 *DRILLS DO NOT ACCURATE*
21.2 *THE MOTOR WORKS BUT NOT THE DRILLS*
21.3 *THE HOLE IS NOT ACCURATE*
22. ANOMALIES DURING NORMAL WORKING PHASES
22.1 BURN TRACES DUE TO DRILLS
22.2 THE DRILLED PIECES ARE NOT PARALLEL TO THE REFERENCE BAR
22.3 *THE WORKING PIECES IS NOT BLOCKED BY THE SAFETY CLAMP*
23. NOISE EMISSION
24. DUST EMISSION
25. PUTTING THE MACHINE OUT OF SERVICE
26. PNEUMATIC DIAGRAM
26.1 *MACHINE AIR PRESSURE ADJUSTEMENT*
27. ELECTRIC DIAGRAM
28 / 29. TERMS OF GUARANTEE / GUARANTEE CERTIFICATE
30. SPARE PARTS CATALOGUE
31. 323TM PNEUMATIC DIAGRAM
32. 323TM ELECTRICAL DIAGRAM
33. SPARE PARTS REQUEST

NOTES

BORING SYSTEM 323 MACHINE CODE 16830101

1. DECLARATION OF CONFORMITY

MAGGI ENGINEERING declares that its boring system machine has been carefully built, using the best suitable techniques to obtain a top quality product. Maggi Engineering s.r.l. declares that this machine is in keeping with the following directives and standards:

- CE 89/392/CEE (directive on machines), modified by 93/68/CEE and 98/37/CEE
- EN 292/1
- EN 292/2
- EN 60240
- EN 60240/1
- EN 73/23 CEE
- IEC 408

Therefore this machine has its conformity label:

maggi engineering
via delle Regioni, 299
50052 Certaldo (FI) Italy
Tel. +39 057163541
Fax +39 0571664275

CERTALDO
The General Manager

2. SAFETY RULES AND GENERAL INFORMATION

2.1 RECOMMENDATION FOR USE AND MAINTENANCE

In this manual we put into evidence all the operations for a correct use and ordinary maintenance of the machine.
We strongly recommend not to make any other type of work repair or operation not suggested in this manual.
We suggest also to keep this manual in a place where the user can easily find and read it.

2.2 MACHINE IDENTIFICATION

The data impressed in the plate placed on the rear guard of the machine identify the machine itself.
When you eventually order spare parts or ask for any suggestions for use or maintenance, you have always to transmit the model type and identification number contained in the plate.
It is absolutely forbidden to remove the plate or modify the data it contains.
The following identification plate is placed on the boring system machine described into this manual:

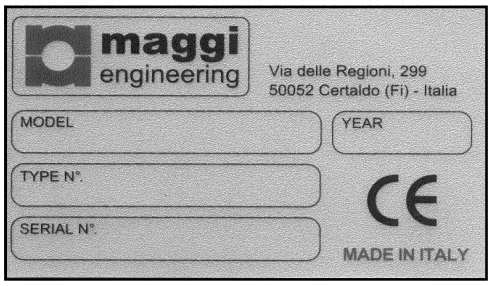

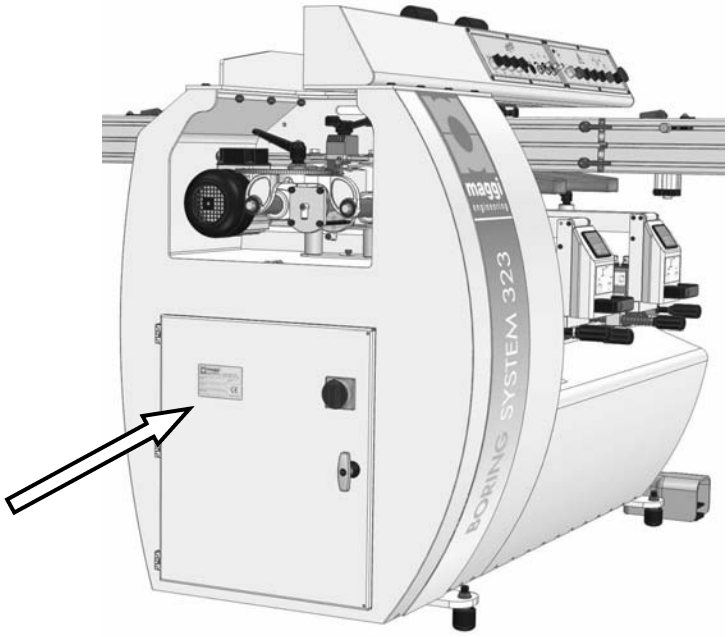

3. OPERATIVE NOTES

Woodworking machines could be dangerous

1) A safe and correct use can be obtained by carefully and scrupulously following all the instructions contained into this manual.
2) The machine must be used only by qualified users and personnel of age. The responsible for safety must be sure that users of the machine have read and understood all the information contained into this manual.
3) The personnel for both ordinary and extraordinary maintenance must be well prepared in mechanics and electricity.
4) Keep off any parts in movement of the machine. Never touch the spindles and/or their respective parts in movement of the machine.
5) Never put one working piece on top of another one. Correctly adjust the machine and then drill only one working piece at time.

ANY ADULTERATION OR REMOVAL OF SAFETY PROTECTION DEVICES CAN CAUSE SEVERE DAMAGE. ANY REMOVAL, EXCLUSION OR MODIFICATION OF THESE DEVICES IS STRICTLY FORBIDDEN. YOU MUST VERIFY AND GUARANTEE THE PERFECT RUNNING OF SAFETY DEVICES BY MEANS OF PERIODIC CHECKS. ANY DEFECT OR PROBABLE DRAWBACK MUST BE IMMEDIATELY SOLVED.

4. MACHINE DESCRIPTION

The boring system machine is built to make holes on wood at a fixed distance of 32 mm (with maximum accuracy) between each centre.
The machine comprises 3 head groups, 2 vertical and 1 horizontal; the vertical ones have a rotating range of 0° - 90°, allowing several drilling solutions.
The operator place the work piece on the working table, does some adjustments by using the pedal control, block the piece using the clamp units and then start drilling.
The machine consists of:
- a steel frame
- three head groups each equipped with its transmission system and spindles with quick change slots
- Rotating clamps group with a rotating range from 0° to 90° for vertical blocking of the work piece
- pneumatic system for placing and moving the heads
- reference stops to obtain the same drilling distance from vertical to horizontal position
- 3 mt Aluminium fence with nr. 4 stops.
- leaflet for positioning the spindle height, a mechanical counter and the " Spiral System " device to regulate the hole depth in the horizontal head group.
- knob for positioning the spindle height coupled with a mechanical counter, a electronic reader coupled with a micrometric regulation device for head positioning, a cart sliding on ball moving blocks in each vertical head group.

4.1 USABLE TOOLS

Drills for quick change spindles, 10 mm O. D. and 20 mm length shank (Fig. A)
Drills up to 40 mm O. D. can be used (Fig. B)
85 mm max useful length (connection excluded)

Fig. A

Fig. B

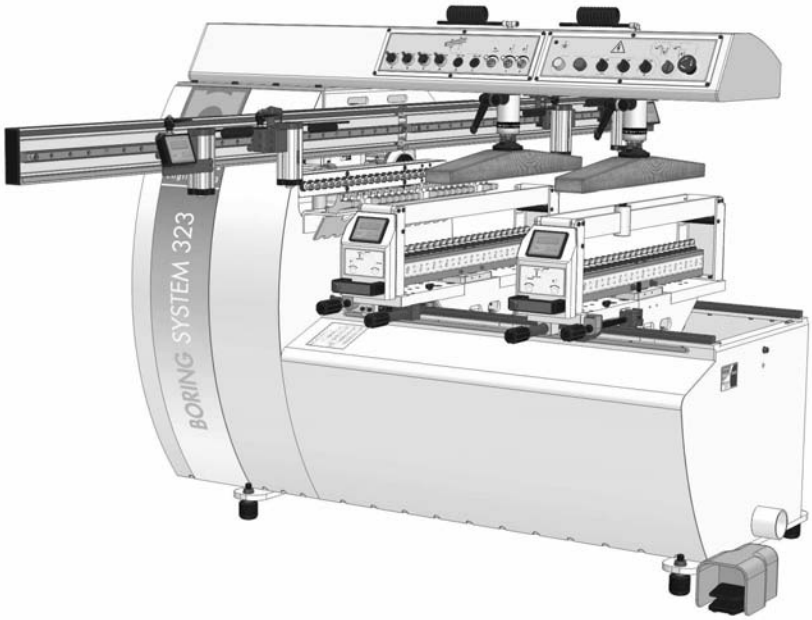

4.2 MACHINE PARTS

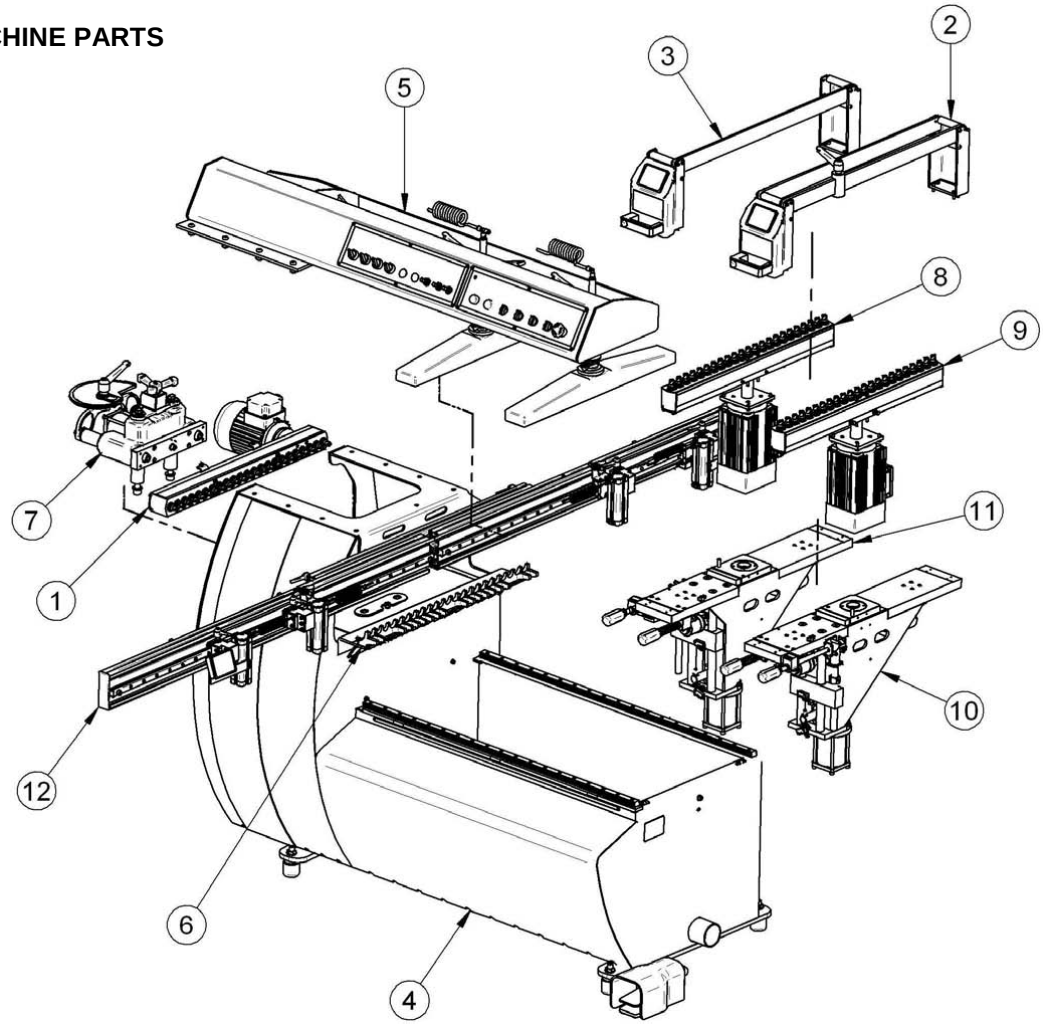

POS.	CODICE	DENOMINAZIONE	Q.TA'	POS.	CODICE	DENOMINAZIONE	Q.TA'
1	26052700	HORIZONTAL HEAD GROUP	1	7	26830500	HORIZ. HEAD HOLDER BLOCK GROUP	1
2	26803200	RH TABLE GROUP	1	8	26830800	VERTICAL HEAD GROUP	1
3	26803201	LH TABLE GROUP	1	9	26830801	VERTICAL HEAD GROUP	1
4	26830006	BOTTOM FRAME GROUP	1	10	26831400	VERTICAL RH HEAD HOLDER BLOCK	1
5	26830100	UPPER FRAME GROUP	1	11	26831401	VERTICAL LH HEAD HOLDER BLOCK	1
6	26830300	RACK UNIT GROUP	1	12	26831600	LONG FENCE GROUP	1

5. EQUIPMENT

The following adjusting devices are given together with the machine:

- quick positioning safety clamps
-electronic reader with micrometric regulator for vertical head positioning.
- 3000 mm long reference rod with 4 pneumatic stops
- n. 4 open end wrenches meas. 6/7,10/11,12/13 16/17
- n. 7 male hexagon end wrenches meas 2,5-3-4-5-6-8-10
- use and maintenance manual

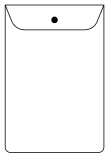

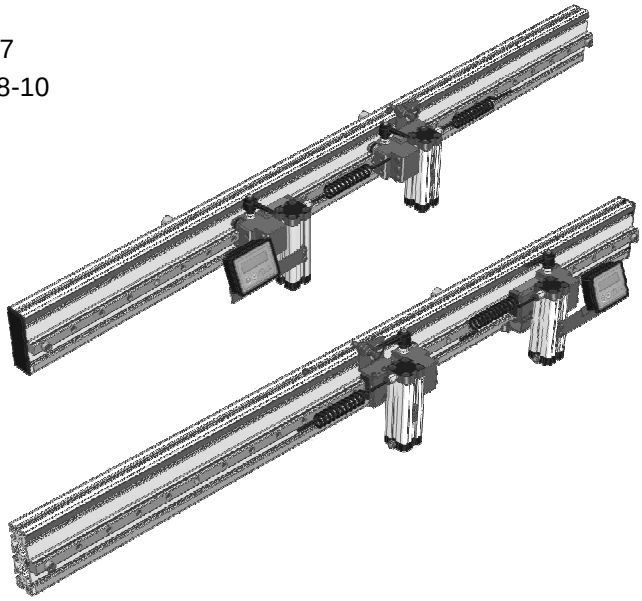

ACCESSORIES

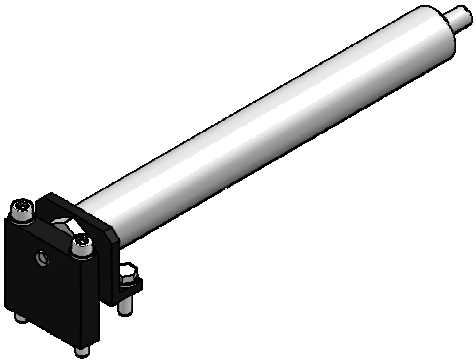

COD. 26800403 BRAKR GROUP “ VAPSINT “

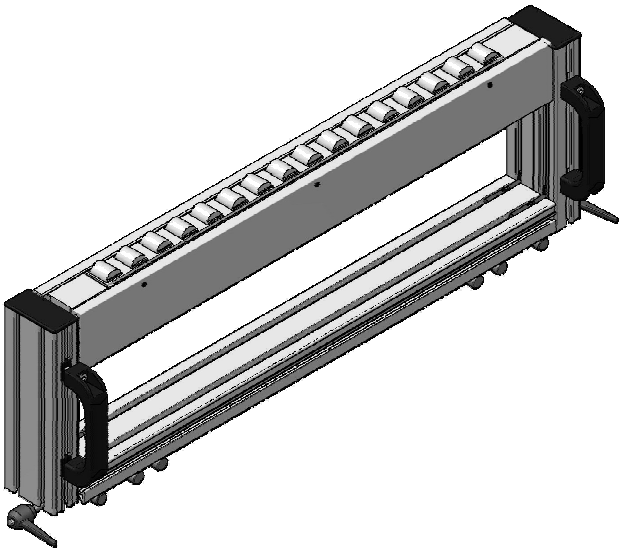

COD. 26800215 ADDITIONAL TABLE GROUP

6. SAFETY PROTECTIONS DEVICES

- The operator assigned to the machine must be well trained on its correct use, its safety protection devices and its accessories.
- The machine drilling devices must be correctly blocked and adjusted.
- The whole machine must undergo ordinary and extraordinary maintenance procedures, following the scheduled timing.
- Before you switch on the machine or start any work session, verify that the working table is free of the shaving left from the wood previously drilled.
- Before making any operation with the machine, verify that the entire working area is free of persons and of any obstacles which could be potentially source of danger.
- Verify that the connecting cable to the electrical power supply is safe, well stretched out and not rolled up.
- Do not enter the drilling zone before turning off the machine.
- Do not put any inflammable substances nearby the machine because of risk of explosion and/or fire due to possible sparks production.
- The operator must pay maximum attention using the pneumatic pedal to work with the machine.
- The operator must think carefully about possible consequences before approaching with his hands the most dangerous areas of the machine: the drilling zone and the working area of the clamp units.
- The machine must be turned off when not in use.

The main risk is due to moving drills. Our machine is equipped with following protection devices to reduce risks to the minimum:

A) Emergency push button

It is inserted in the control panel, in the front side of the machine. All the movements of the machine stop immediately when the emergency push button is pushed.

B) Series of stickers and plates

They describe in details all the safety instructions, the correct working procedures and identify the main parts of the machine. One plate shows the identification and serial number of the machine.

C) Safety clamp (patented)

They are on the surface of the working table or of the already positioned working piece, so that the operator can not put unintentionally his hands below.

D) Safety protection device

No-way-back coil preserve against accidental start. No-way-back coil preserve against accidental start.

CEE, ISO, UNI SYMBOLS

WARNING SYMBOL: ALL THE OPERATIONS HIGHLIGHTED WITH THIS SYMBOL ARE DANGEROUS TO THE OPERATOR; PLEASE BE VERY CAREFUL IN DOING THESE OPERATIONS.

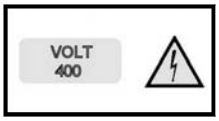

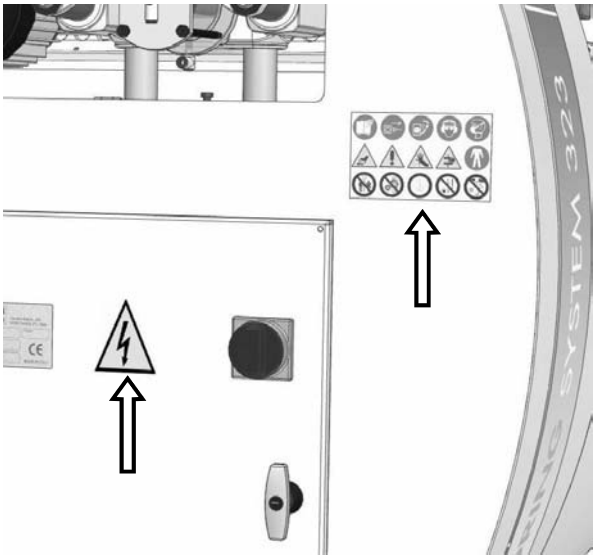

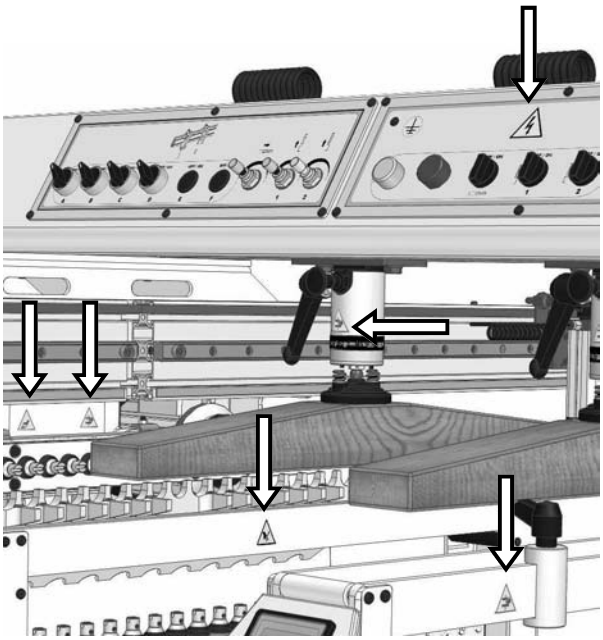

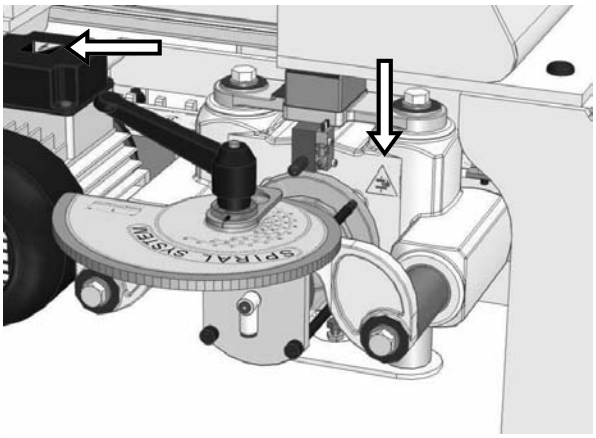

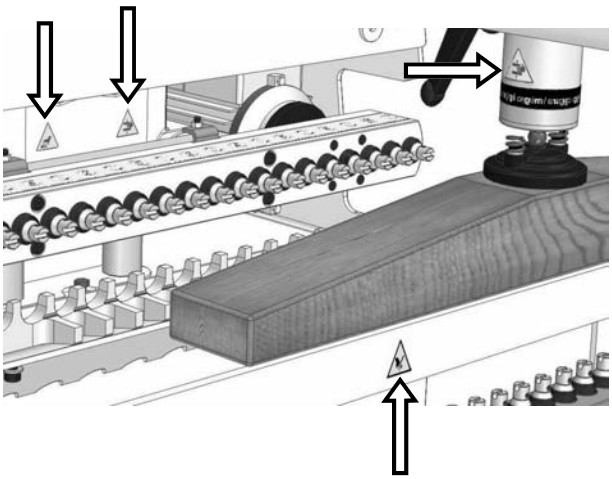

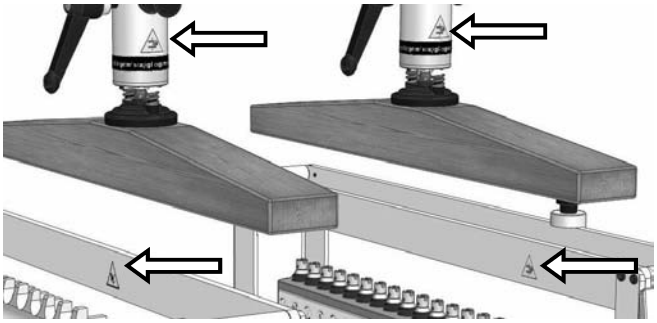

WARNING SYMBOLS

⚠ WARNING TO AVOID INJURY, KEEP HANDS-OUT OF DRILLING AREA WHEN MACHINE IS OPERATING.

⚠ WARNING

FOR YOUR SAFETY

1. READ AND UNDERSTAND INSTRUCTION MANUAL BEFORE OPERATING BORING MACHINE.
2. Always wear proper eye protection.
3. Do not operate while wearing gloves, neckties, jewelry or loose clothing.
4. Keep guards in place at all times and in good operating condition.
5. Support work material firmly against fence.
6. Use clamps or fixtures for small or narrow work stock.
7. Keep hands away from rotating bits.
8. Make sure that drill bits are not damaged and properly secured before operating.
9. Disconnect and lock out machine from power source before making repairs or adjustments.
10. Do not operate while under the influence of drugs, alcohol or medication.
11. Do not expose to rain or use in damp locations.

⚠ WARNING
Rotating cutter head.
Do NOT operate with guard removed.
Lockout/tagout before servicing.

⚠ WARNING
Moving parts can crush and cut.
Do NOT operate with guard removed.
Lockout/tagout before servicing.

⚠ WARNING
Flying objects and loud noise hazards.
Wear approved ear and eye protection.

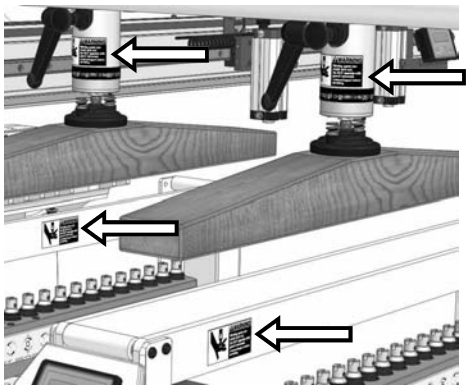

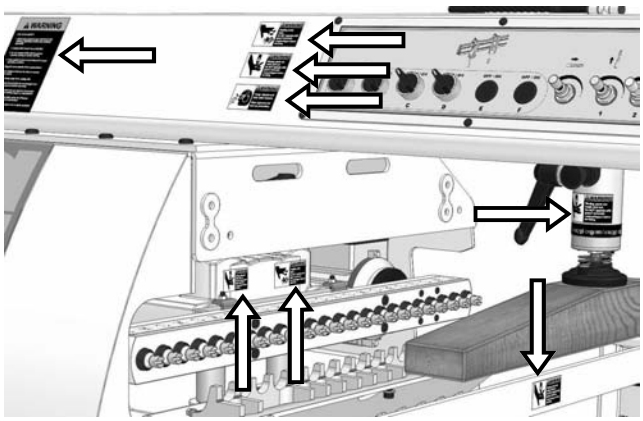

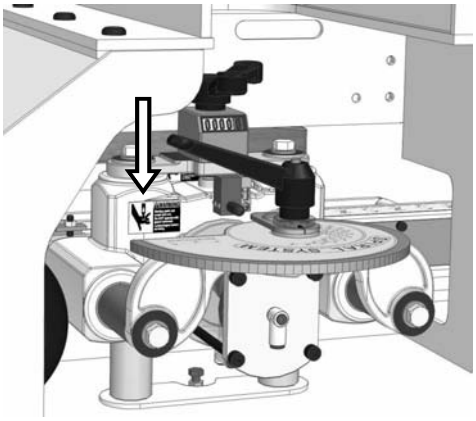

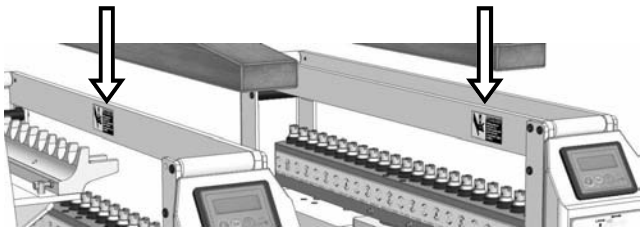

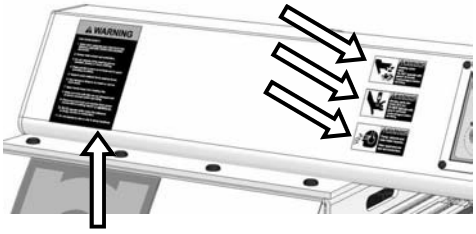

7. INDIVIDUAL PROTECTION DEVICES

Despite all adopted safety protection devices, following situations may be dangerous:
- fall or throw of wood sliver during working operation
- entangling parts of clothes in moving parts of the machine
- danger of fire
- danger of electrocution
- danger of damage due to noise emission
- danger of damage due to dust emission

To prevent risks during placing, installation, adjustment, use, ordinary and extraordinary maintenance, we strictly recommend to use the following individual protection devices:
- gloves (for example during machine parts handling)
- anti-crushing and anti-sliding shoes
- glasses or face-shields against chip or wood sliver during working or cleaning operation of the machine
- anti-dust masks

Moreover, the clothes must be suited to avoid danger of:
- catching
- dragging
- crushing
- sliding
- abrasion
- contact lenses are prohibited

For further information and recommendation please refer to chapter. 3. OPERATIVE NOTES.

8. TECHNICAL DATA

GENERAL	
DISTANCE BETWEEN EACH SPINDLE	32
N°OF CLAMPS	2
MAXIMUM CLAMP HEIGHT FROM WORKING TABLE	62
MAXIMUM WORKING PIECE DIMENSIONS	3000x920x80 mm
WORKING AIR PRESSURE VALUE	6-8 Bar
STANDARD AIR CONSUMPTION PER AIR CYCLE	12 L
NET WEIGHT	760 Kg
OVERALL DIMENSIONS	1720 x 1015 x 1395 mm
VERTICAL HEADS	
N°OF VERTICAL TURNING HEADS	2
N°OF SPINDLES FOR EACH HEAD	23
DISTANCE BETWEEN FIRST AND LAST SPINDLE FOR EACH HEAD	704 mm
MINIMUM DISTANCE BETWEEN PARALLEL HEADS	150 mm
MAXIMUM DISTANCE BETWEEN VERTICAL HEADS	920 mm
MAX. DRILLING DEPTH	50 mm
WORKING TABLE HEIGHT	890 mm
N°OF MOTORS FOR EACH HEAD	1
MOTOR POWER	2 (1,5) HP (KW)
MOTOR R.P.M.	2800 rpm
HORIZONTAL HEADS	
N°OF HORIZONTAL HEADS	1
N°OF SPINDLES FOR EACH HEAD	23
DISTANCE BETWEEN FIRST AND LAST SPINDLE	704 mm
MAXIMUM HEAD TRAVEL WITH DIGITAL COUNTER	40 mm
MAX. DRILLING DEPTH	65 mm
N°OF MOTORS	1
MOTOR POWER	2 (1,5) HP (KW)
MOTOR R.P.M.	2800 rpm

9. INTENDED USE

9.1 MATERIALS

The boring system machine has been designed and built to drill the following materials:
- solid wood
- m.d.f.
- panels of shaving wood, laminated wood, ennobled wood, etc.

The maximum panel thickness is 80 mm and its maximum dimensions are those described in chapter 8.
- Other materials, different from the ones described above, can be machined only after the written approval of the manufacturer. In particular it is not allowed to machine materials having toxic or dangerous substances for operator's health and safety, metals or other materials that can modify the correct working of the machine or cause fire or explosion..
- Any modification is forbidden without the written authorization of the manufacturer.
- It is not allowed to tamper with the safety protection devices.

9.2 IMPROPER USE

The data impressed in the plate placed on the rear guard of the machine identify the machine itself. When you eventually order spare parts or ask for any suggestions for use or maintenance, you always have to transmit the model type and identification number contained in the plate.
It is absolutely forbidden to remove the plate or modify the data it contains.
The following identification plate is placed on the boring system machine described into this manual:

The manufacturer cannot be considered libale for any damage caused to people, animals or property resulting from improper use of the machine.

Never leave the machine unattended when connected to the electrical power supply.

10. TRASPORT

The BORING SYSTEM 323 MACHINE is packed in a wooden box and/or in cardboard and nylon. It is possible to move it by means of Forklift, crane, transpallet. Weight data are written in chapter 8. Before moving the machine verify that the entire surrounding area is free of obstacles. In case of stocking, the machine must be kept in dry places, away from rain, snow or humidity. During all moving operations we recommend to be extremely careful to avoid danger of damage for persons, things and the machine itself.

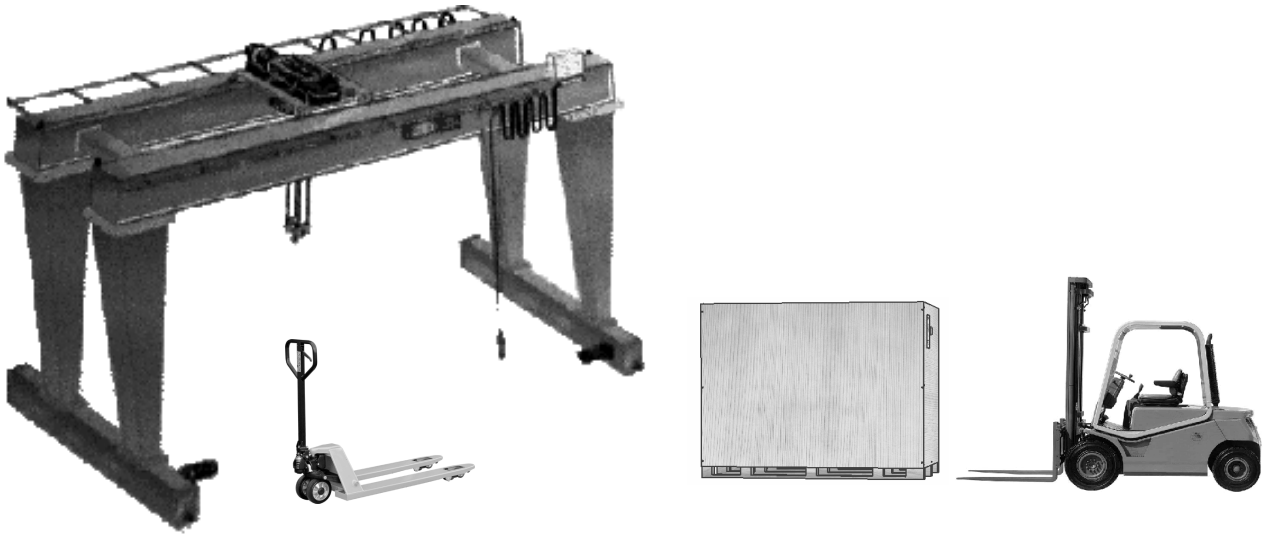

11. OVERALL DIMENSIONS

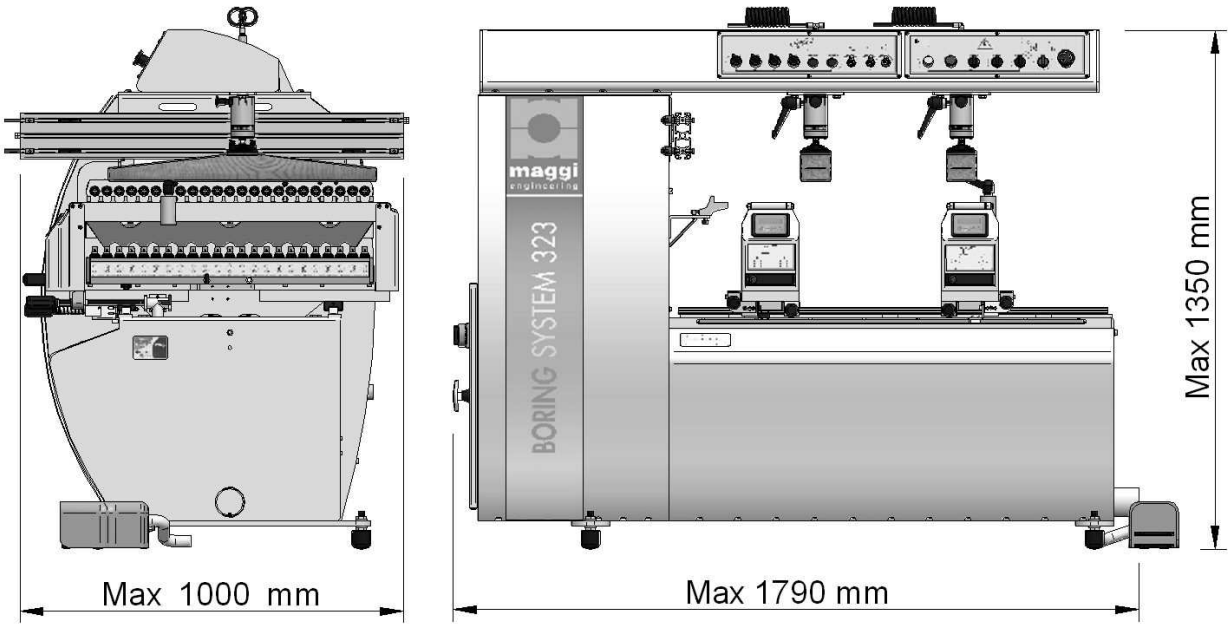

12. INSTALLATION

12.1 PLACING THE MACHINE

The machine must be placed on a stable plain surface, capable to support the weight of the machine itself; any possible difference in height must be in conformity with building rules. When the machine has to be placed on raised plain surface (higher floor) the load-bearing slab must be adequate to the weight of the machine. Put the machine in the right place, as requested operative requirements, where it is easy to connect it to electrical and pneumatic power supply.
Put the machine in a place where there is enough lighting to see every part of the machine itself.
We suggest also to arrange an exhaust fan nearby the machine to clean it periodically.

12.2 LEVELLING

Adjust the levelling feet so that the machine is perfectly leaned on the floor, then align the working table of the machine by using a spirit level.
Before going on with levelling, tighten the alignment pins into the threaded holes of the bed frame, remove the protective oil film from planes and every not painted surface, by using petroleum or kerosene only.
Do not use any solvent as gasoline and diesel oil, because they can damage the paint, making it dull, or oxidize other parts.

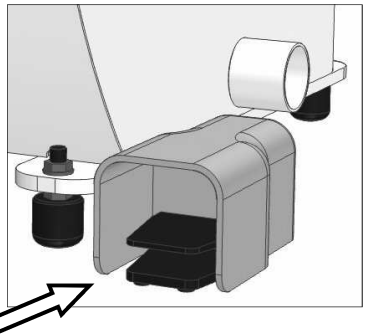

B

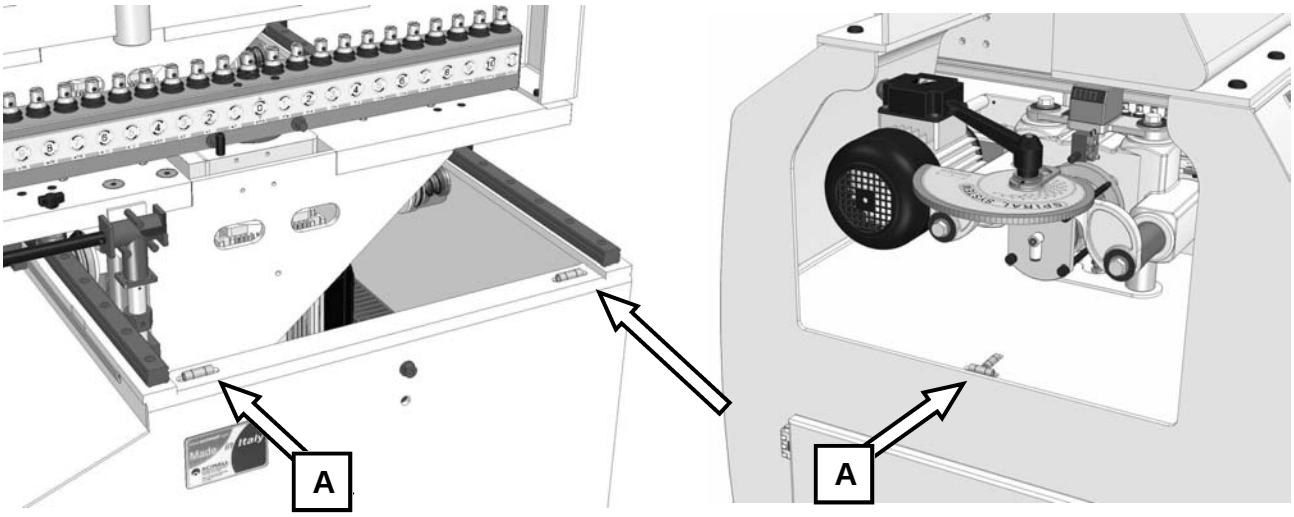

A

A

13. WORKING AREA

For a correct use of the machine, the following zones must be kept clear.

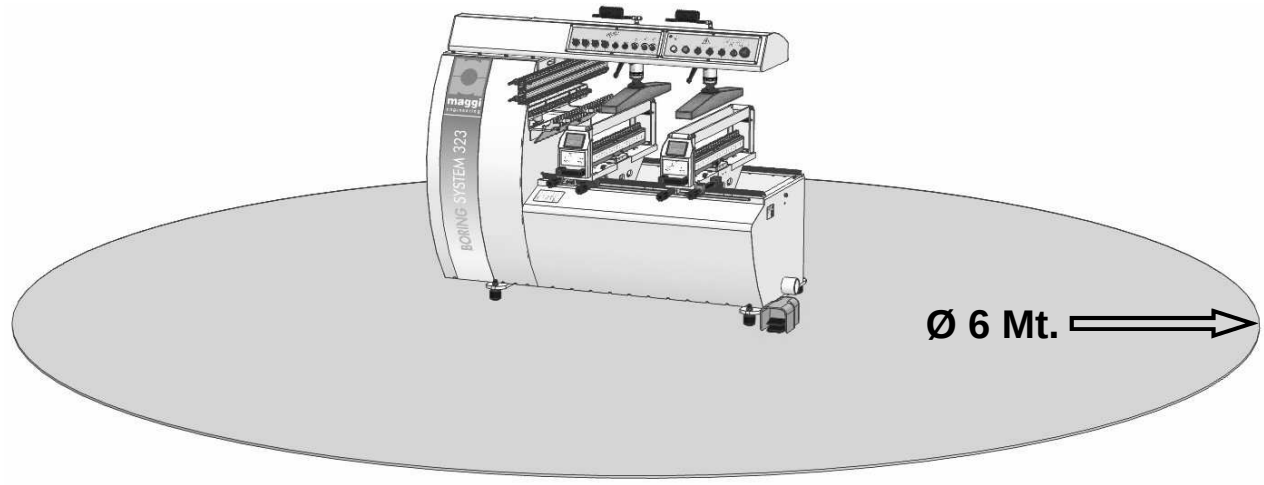

14. ASSEMBLING AND PRELIMINARY PREPARATION FOR SET UP

The machine is delivered partially assembled, so it is necessary to mount all those parts left not assembled for packaging reasons. The buyer must verify that all the machine parts are safe and not damaged after transportation, before going on with assembling. In particular we suggest to verify the most delicate parts, as electrical or mechanical components, pneumatic tubing or the safety protection devices of the machine itself. After assembling, it is necessary to clean all surfaces from protective oil so that the working pieces remain clean during working operations.
.

ATTENTION: THE MACHINE IS DELIVERED WITHOUT EXHAUST SYSTEM. THE USER HAS TO INSTALL A PROPER EXHAUST FAN DEPENDING ON THE TYPE OF USE, THE MATERIAL AND THE TIMING OF USE OF THE MACHINE. THIS SYSTEM HAS TO KEEP THE DUST CONCENTRACTION BELOW THE VALUE ALLOWED BY THE LAW OF THE COUNTRY WHERE THE MACHINE IS INSTALLED.

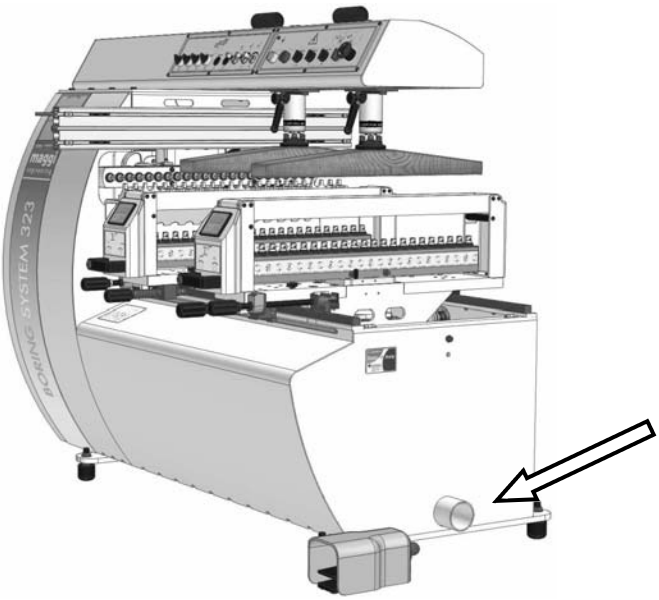

SAWDUST REMOVAL
The removal of sawdust and wood scrap, has to be effected in accordance to the current rules of the country where the machine is installed.
We suggest to ask the qualified body of the country where the machine is installed for the rules concerning this removal to know exactly how to behave properly.

15. ASSEMBLING AND CHECKING PROCEDURE

The Boring System 323 boring machine is packed in a large wooden box. We strongly suggest to apply a careful and correct procedure to transport the box to the area where the boring machine will be installed.

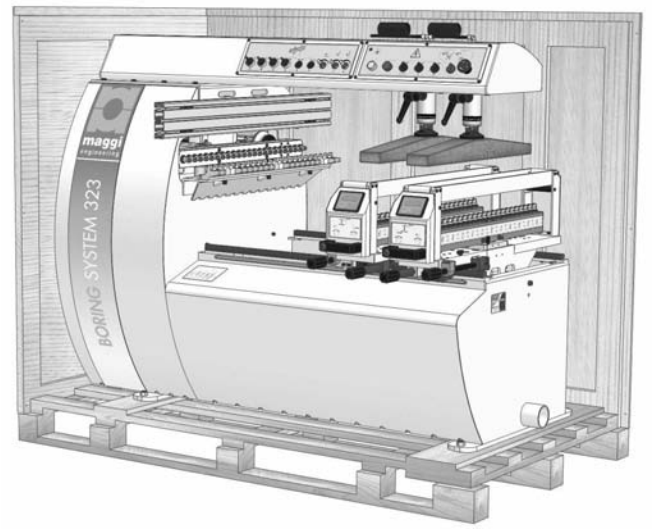

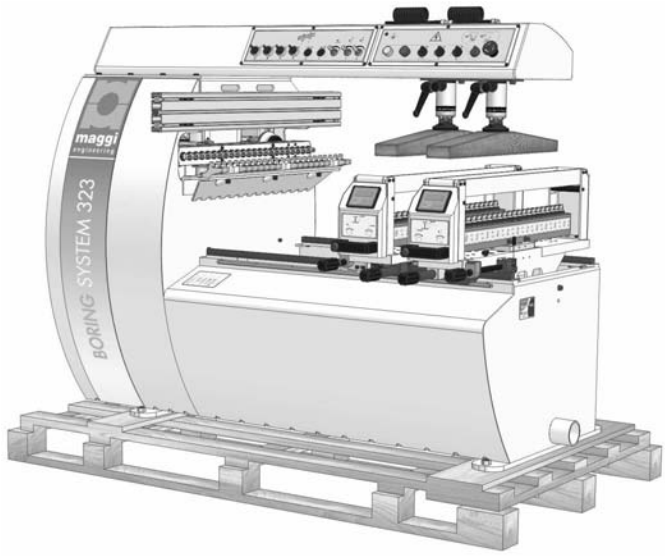

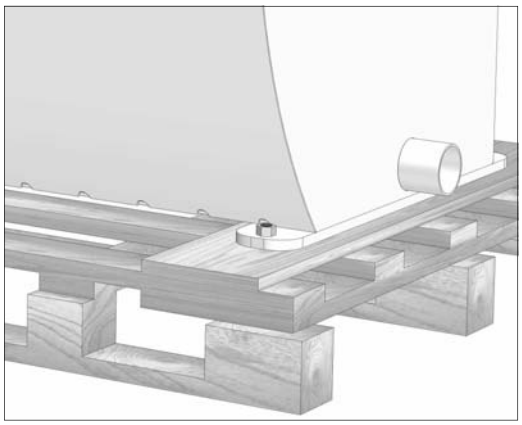

Remove the blocking devices placed on the four bottom corners of the machine (they fix the machine to the wooden bottom frame): unscrew the top and bottom nuts and then remove the threaded pin, as shown in the figures above and below. Now you can completely separate the machine from its packing.

Transport and put the machine in the place selected for working. Please be careful in doing this procedure and follow the instructions described in chapter12-15

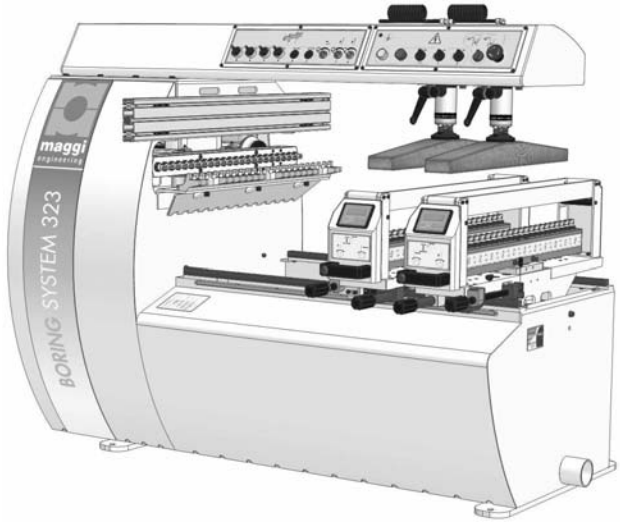

Please note that the right and left extension fences, the pneumatic pedal and a box containing some accessories, are placed inside the bottom frame (see figures below). The pneumatic pedal is delivered already connected to the pneumatic system.

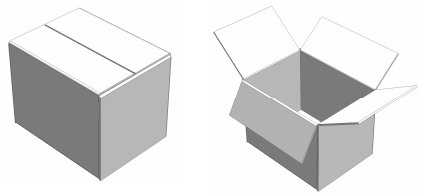

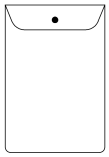

Accessories insine the box:

- Display Elgo Manual
- Boring 323 Manual
- Wrenches Kit
- n°1 manual stop
- n°4 feets + washers + nuts
- n°4 long fence pins and vstei screws

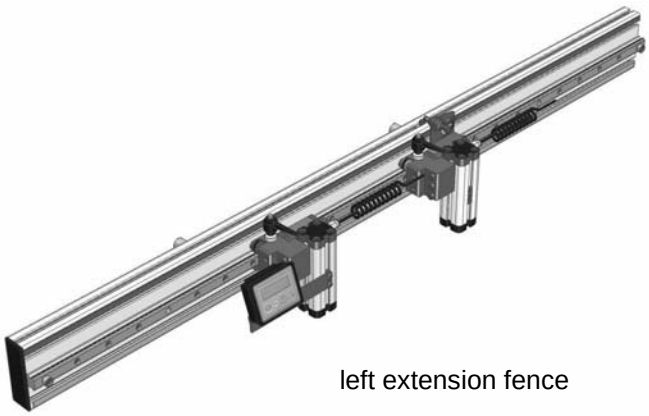

left extension fence

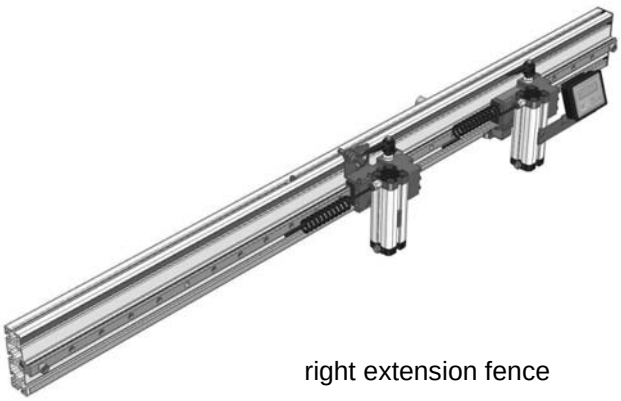

right extension fence

Assemble the feets to the bottom frame, as shown in figure below (see chapter 12.2)

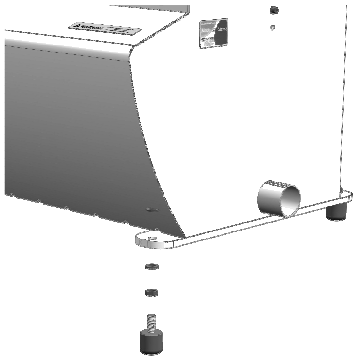

Remove the pins which fix the carts of the vertical heads to the bottom frame (see figures below)

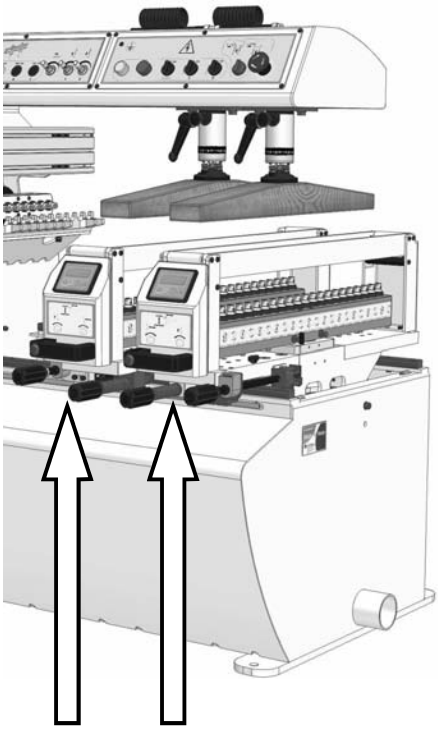

carts of the vertical

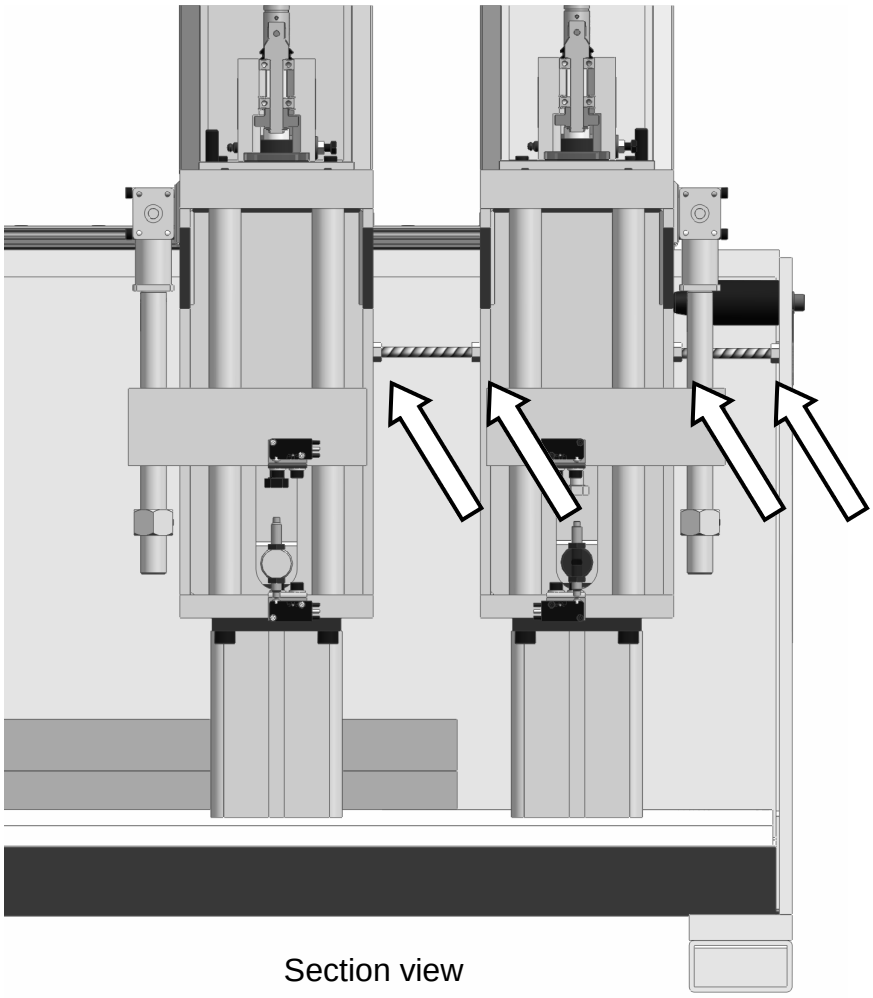

Section view

Working plane levelling checking *(see chapter 12.2)*

Use a spirit level (see figure on the right) to align the machine working table. Put the spirit level directly on the slideway to check the horizontal alignment along X axis. Put the spirit level on the rack and on the plane group supports to check the planar alignment along Y axis. To adjust levelling and correct errors please screw/ unscrew the Elesa feet pins, placed in the bottom frame (see the following figures for details).

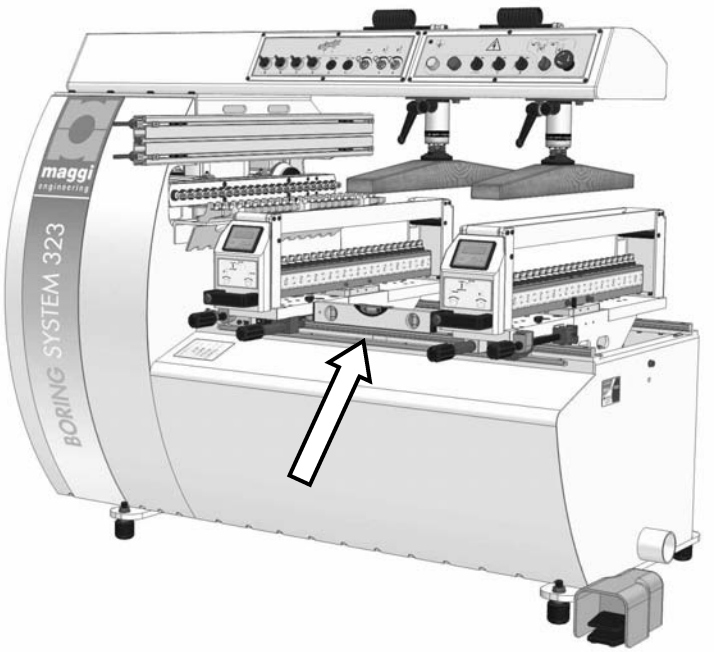

Horizontal alignment along X axis: spirit level on slideway

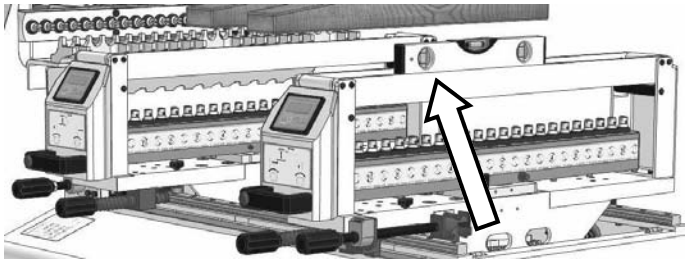

Planar alignment along Y axis:
spirit level on external table group

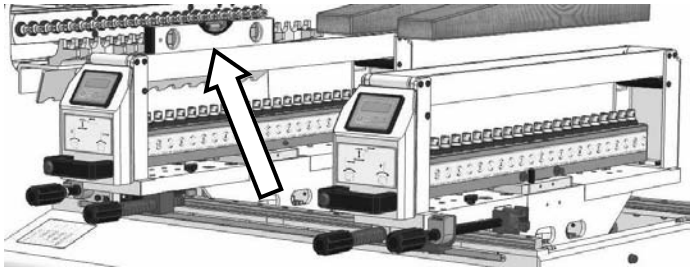

Planar alignment along Y axis:
spirit level on internal table group

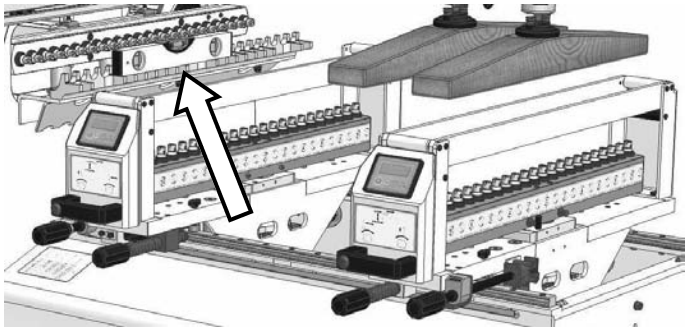

Planar alignment along Y axis:
spirit level on rack

Assemble right and left extension fences as shown in the figure below

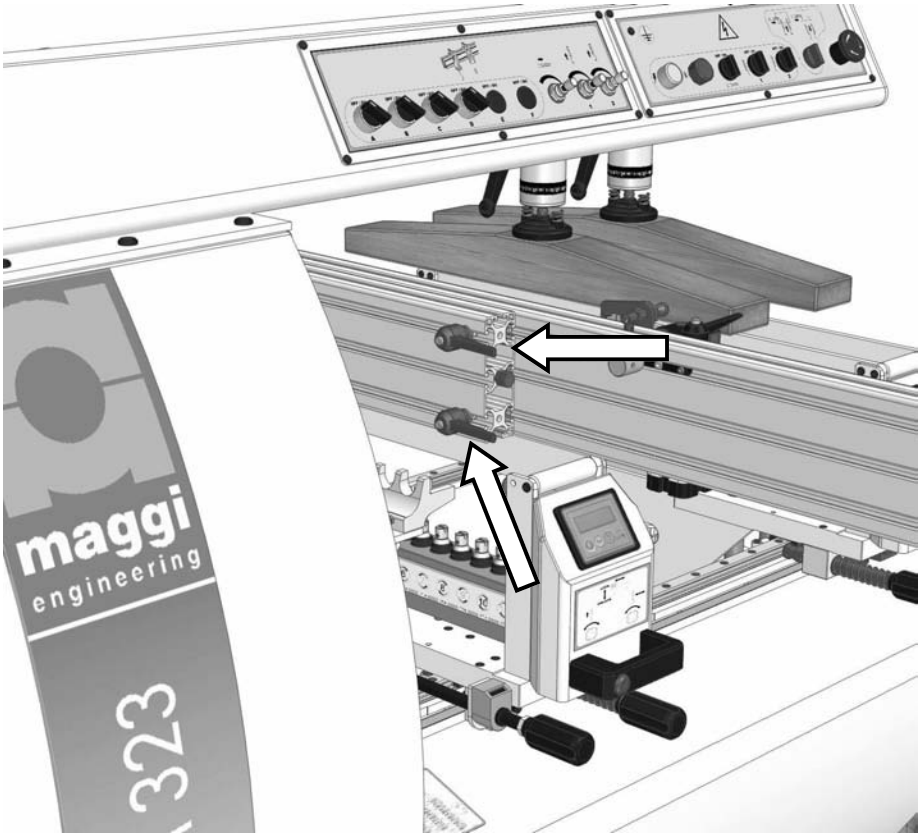

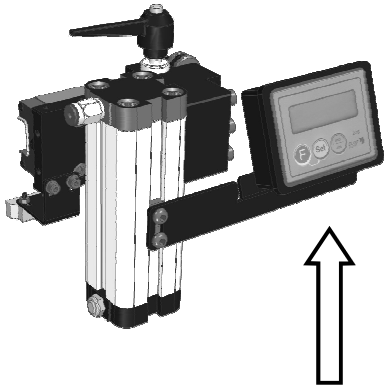

display

Insert the pins and lock them by using snap level

attention the programming and the maintenance of the VISUAL DISPLAY unit must be reported to the just manual attached one to the machine

Now you can go on performing the following connection procedures
(be careful in doing the procedures, refer to chapter 16)
attention the programming and the maintenance must be reported to the just manual attached one to the machine
attention the programming and the maintenance must be reported to the just manual attached one to the machine

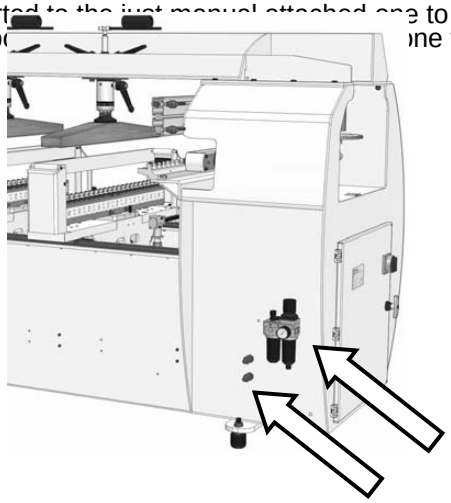

- Connection to the electric power supply (see chapter 16.1)
- Connection to the pneumatic system (see chapter 16.2)
- Connection to dust extraction system (see chapter 16.3)

Drilling procedure *(please carefully follow the instructions described in chapter 17)*

16. MACHINE CONNECTION TO EXTERNAL POWER SUPPLY

After machine assembling and installation, connect it with:
- Electrical power supply
- Pneumatic power supply
- Dust suction system

16.1 CONNECTION TO ELECTRICAL POWER SUPPLY

To get to the electrical system of the machine, open the door of the general panel by unscrewing the knobs on its right side. We recommend not to connect the machine to the electrical power supply until it is not correctly placed in the right place. Before connecting the machine to the electrical power supply, it is necessary to verify that the electrical system corresponds to the following necessary power and safety requirements:
- Grounded equipotential electrical system
- Presence of fuses or protection switches against short circuits on every conducing cable R-S-T, except the grounded one
- The electrical power system must be in conformity with CEI 64.8 (CENELEC HD 384, IEC364-4-41) rules
- Voltage and frequency for the motors are specified on the plates placed on them
- Connect the power supply cable to R-S-T terminals
- Automatic protection devices installed upstream respect to the machine; they have to be coordinated to guarantee the automatic break according to above mentioned rules.

The electrical connection is done by three-phase plug (or single-phase plug, depending on the panel).
The cable for ground connection is yellow-green.
The tolerance of admissible voltage is +/-10%
When voltage is applied to the electrical power supply, check that the spindles rotation direction is the one written in the plate placed on the head (Black=Right; Red=Left).
If the rotation direction does not match the one impressed in the plate, please invert the connection cables to three phase power supply. For any information please see the electrical diagrams included in this manual.

Attention : we strongly recommend that the connection to the electrical power supply is done by technical qualified personnel only.

Never leave the machine unattended when connected to the electrical power supply

16.2 PNEUMATIC CONNECTION

Connect the Filter-Reducer-lubricator (FRL) group to the pneumatic power supply by using a 8 mm minimum O. D. rubber or nylon pipe.
If the pipe is more than 5/6 meter long, we suggest to use a 10 mm O. D. pipe; it is also recommended to use a supply shut-off valve on the machine with manual control complete with air relief to turn off the pneumatic connection. The FRL group consists of:

- Filter, it purifies air from dust and humidity and so it protects valves and seals of pneumatic cylinders
- Reducer (Regulator), it is used to regulate the working air pressure keeping its value within the range mentioned above
- Lubricator, it is used to put a well defined oil quantity into the pneumatic circuit to lubricate cylinders, valves, seals and parts in movement.

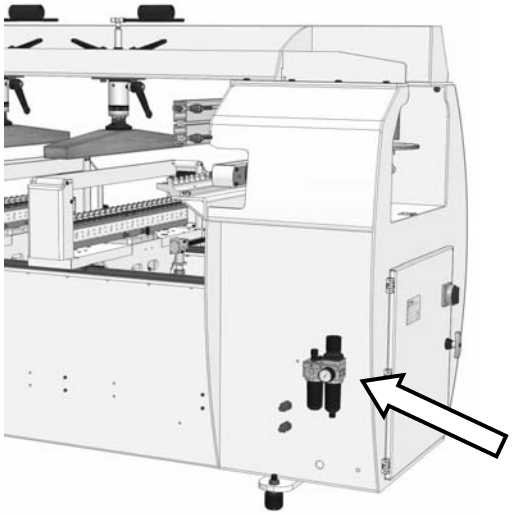

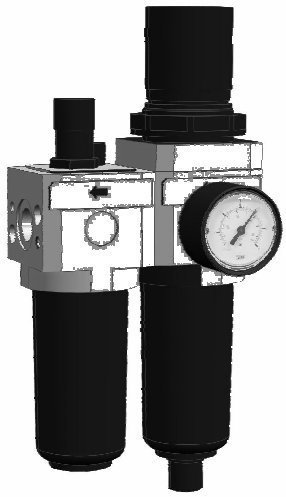

16.3 DUST SUCTION CONNECTION

The exhaust fan opening is of 80 mm O. D.. Please make sure that the flexible pipe connected to the opening is well tight with a clamp so that it can not be disconnected.

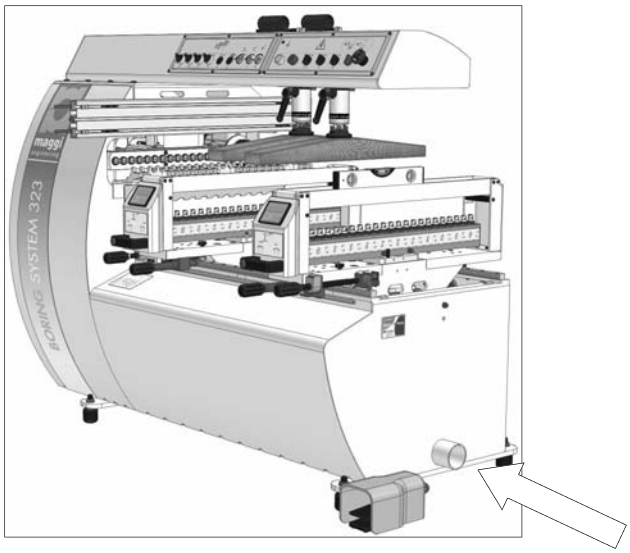

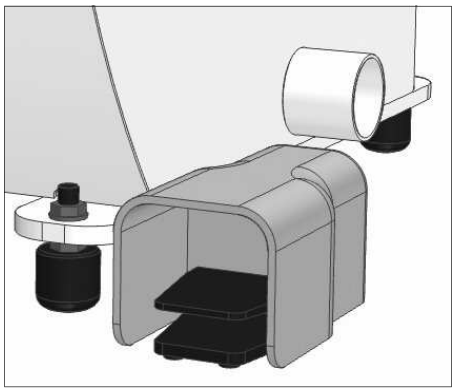

16.4 CONTROL DEVICES

The machine is intended for manual control and use, and then all the control devices are very simple to use and of high reliability.

- 1) Lockable general electrical sectioning device (see fig. 1)
- 2) Pneumatic pedal (see fig. 2)
- 3) Drilling heads speed regulator (see fig. 3)
- 4) drilling depth regulator for vertical heads (see fig. 4)
- 5) Clamp positioning system (see fig. 5)
- 6) Vertical heads locking handle (see fig. 6)
- 7) Screw for horizontal head movement (see fig. 7)
- 8) lifting regulator for horizontal head (see fig. 8)
- 9) switches for inserting vertical head into drilling cycle (see fig. 9)
- 10) switch for inserting horizontal head into drilling cycle (see fig. 10)
- 11) Hand levers for frontal leaf insertion (see fig. 11)

- 12) Line light, running and stop push-button(see fig. 12)
- 13) Synchronous alternate selector (see fig. 13)
- 14) Screw for vertical heads rotation locking (see fig. 14)
- 15) Rack leaf locking handle (see fig. 15)
- 16) Drilling group end-stroke device (see fig. 16a, 16b)
- 17) Flux regulator (see fig. 17)
- 18) Handle for vertical heads decimal position regulation (see fig. 17)

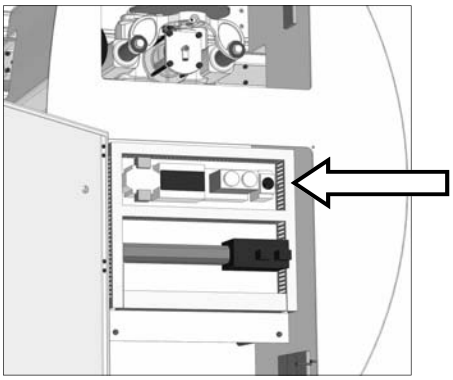

Fig. 1

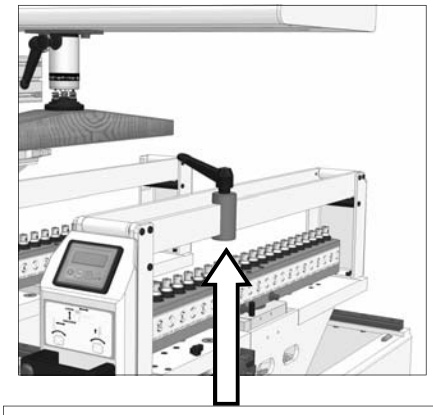

Reference double limiter unit

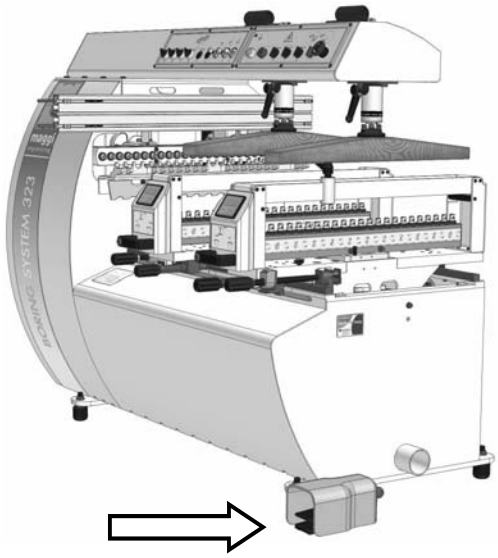

Fig. 2

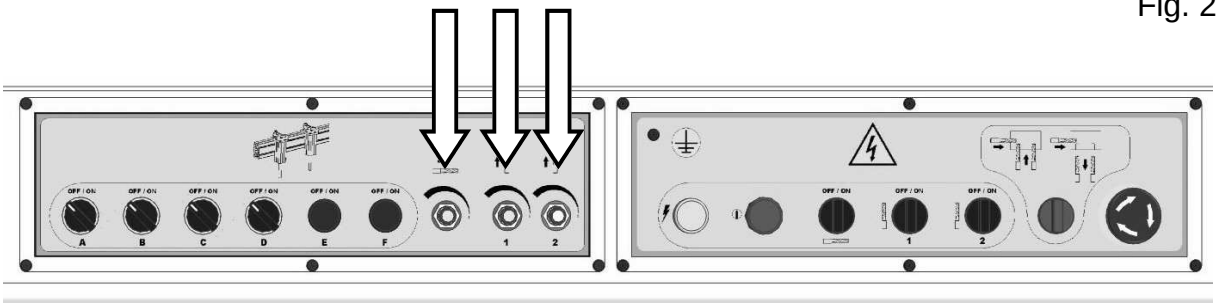

Fig. 3

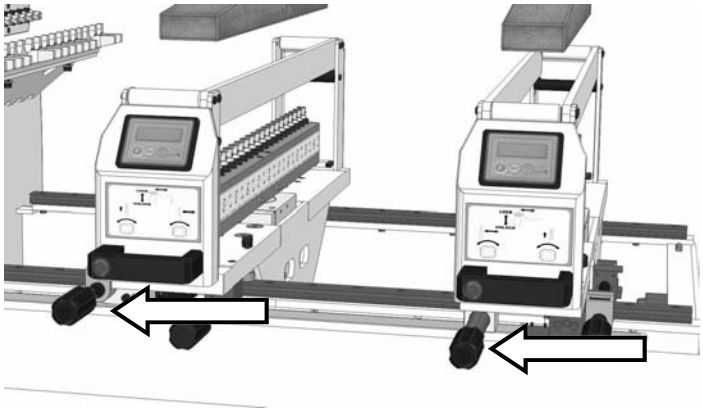

Fig. 4

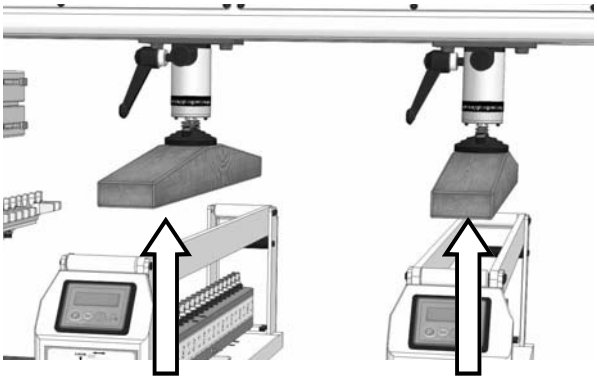

Fig. 5

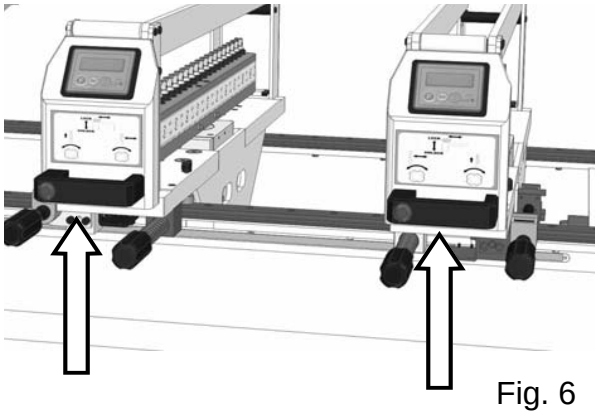

Fig. 6

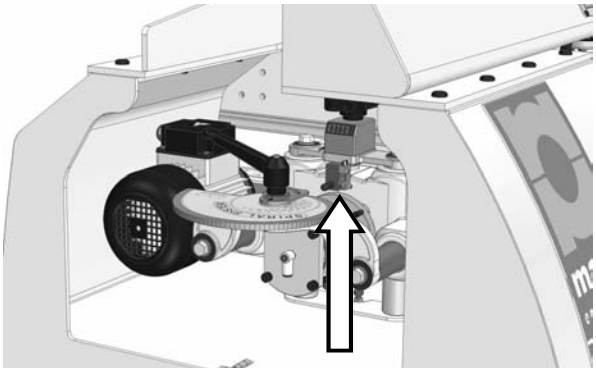

Fig. 7

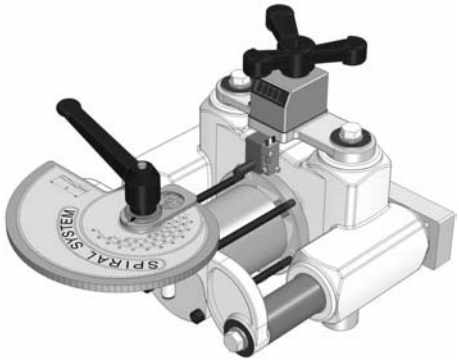

Fig. 8

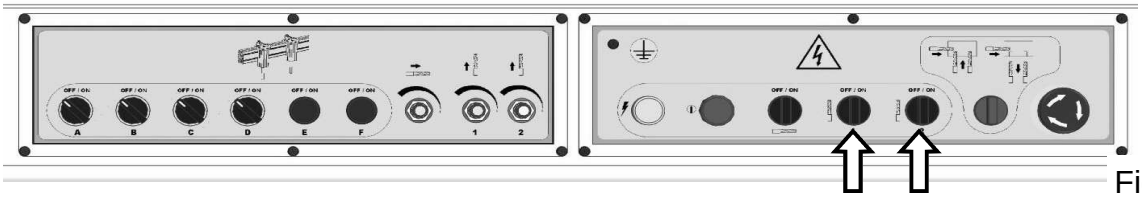

Fig. 9

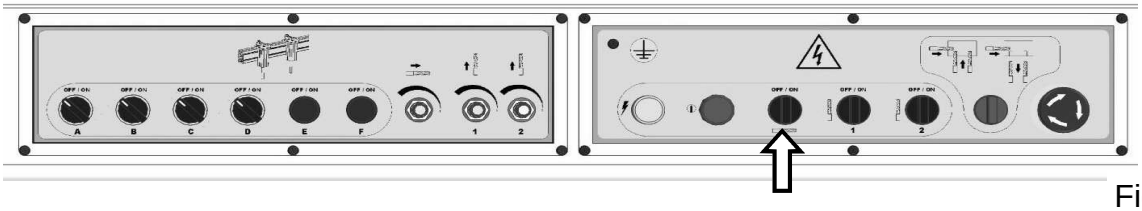

Fig. 10

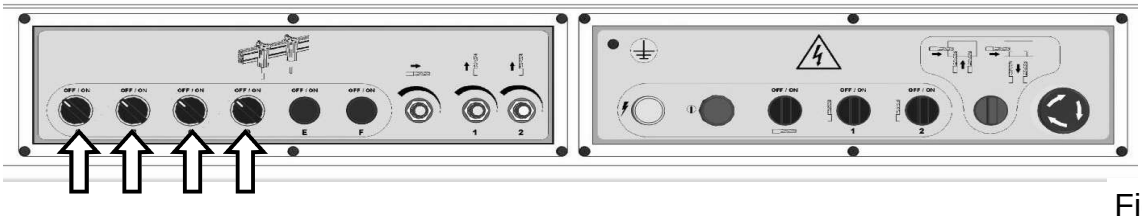

Fig. 11

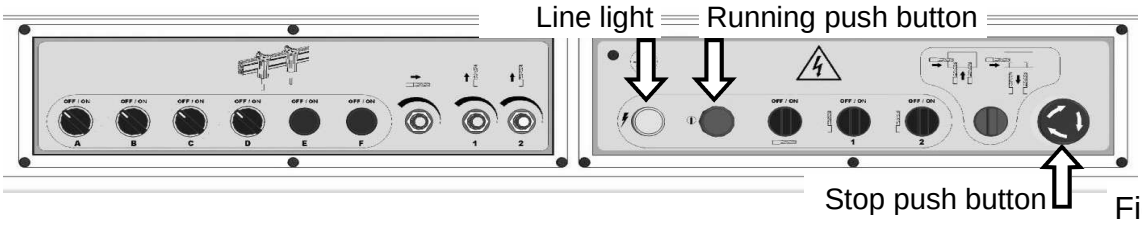

Fig. 12

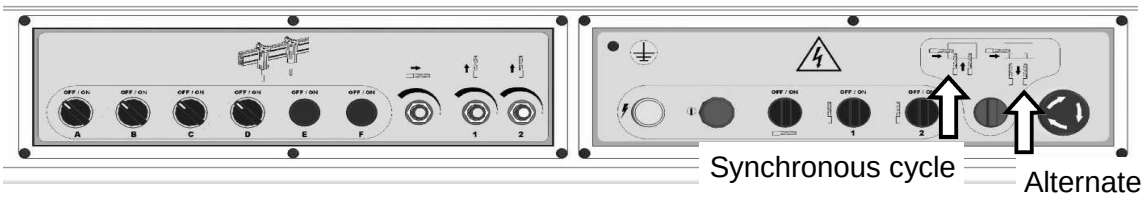

Fig. 13

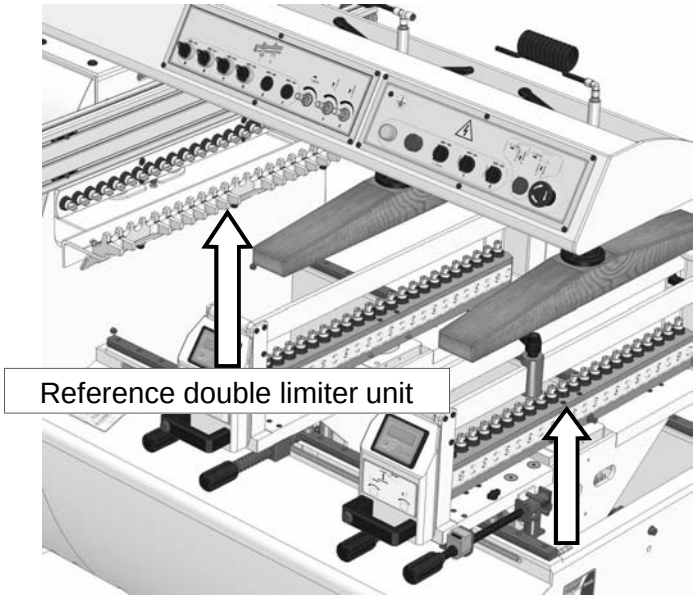

Fig. 14

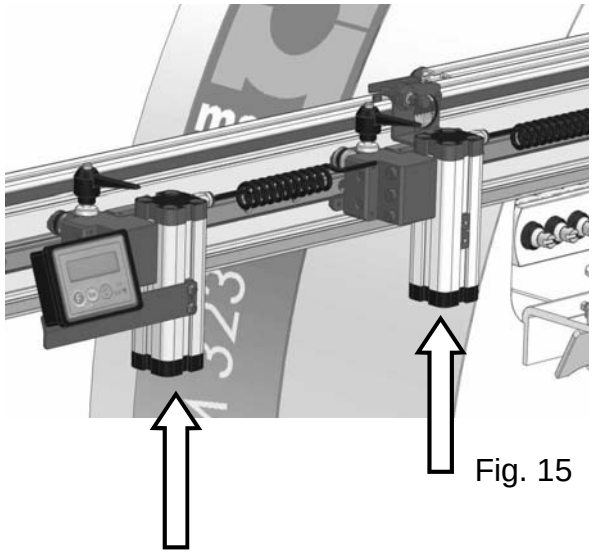

Fig. 15

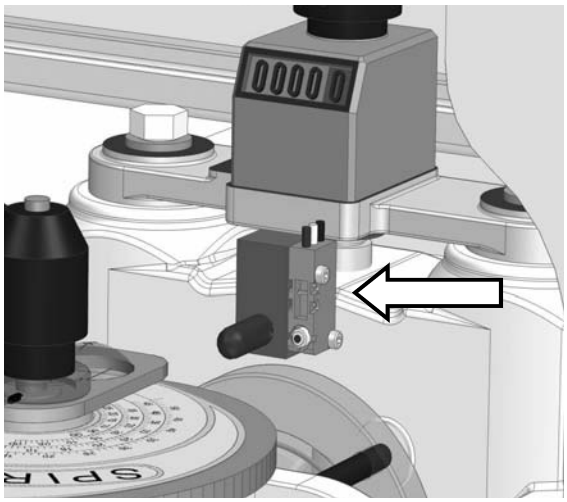

Fig. 16a

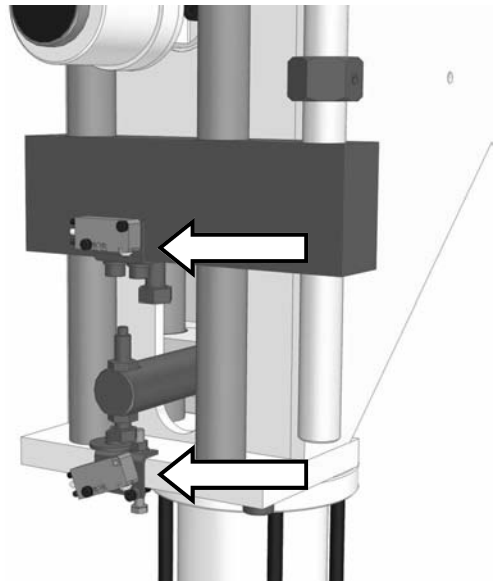

Fig. 16b

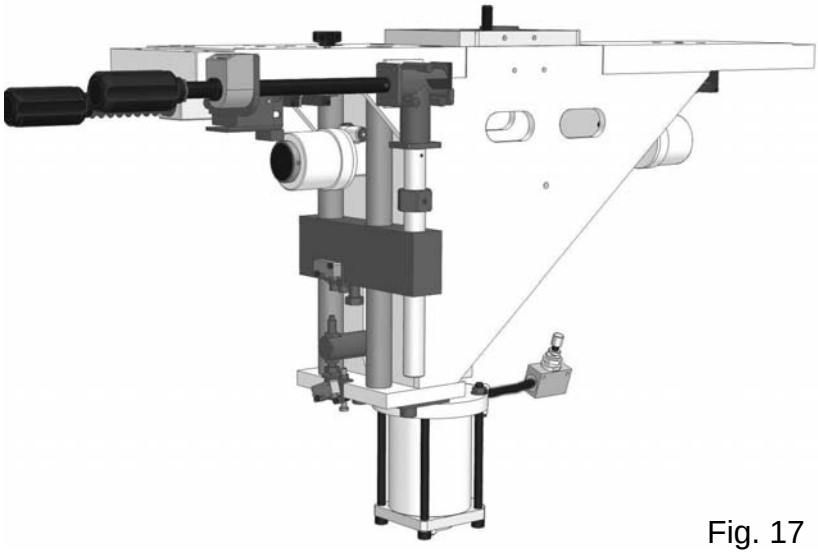

Fig. 17

16.5 WORKING RULES

Before starting any working operation, it is necessary to take care to the following warnings:

- Check drilling tools wear
- In case of tools wear, we always suggest to replace the worn tool before starting any working opera-

17. DRILLING SET-UP

1. Adjust vertical heads from left to right by using locking/unlocking handles (see fig. 6). The distance between the centre of holes and the left side of the work piece to be drilled is visualized into the digital display, which shows also decimal figures. You can use a special regulator handle to facilitate all the positioning operations. (see fig. 17 detail 18).
2. If necessary, rotate the spindle stand heads by unlocking the four screws (see fig. 14) in centre position respect to them.
3. Insert bushes and their drilling tools into the selected spindles for drilling, and then manoeuvre the selectors (see fig. 9-10) on the control panel to choose the heads used for working.
4. Adjust horizontal head drilling depth by using the adjusting handle coupled with the numeric counter (see fig. 4). The adjust properly the drilling feed by working on the regulators placed in the control panel (see fig. 3)
5. Use the handwheel to adjust the height of the horizontal head and read the height value in the counter. All the adjustments of horizontal head must be done starting from bottom to top position.
6. Move clamps (see fig. 5) above horizontal heads and place them on the heads side, check that they are 5 mm above the working piece.

7. To select the fall of frontal stop, first of all unscrew the locking handle (see fig. 15), then adjust their position reading the measure on the graduated scale place on the metric bar (see fig. 18). A supplementary reference stop placed on the lath table can be used to obtain an improved stability of the working piece, as shown in fig. 2. This supplementary stop is used especially when you have to drill large panels.
8. Insert the panel to be drilled on the working table nearby the frontal stop and the left side of the machine.
9. Press the pneumatic pedal (see fig. 2) and keep it pressed until the end of the drill, then release it the clamps come back to the rest position and the motors stop.

attention the programming and the maintenance of the VISUAL DISPLAY unit must be reported to the just manual attached one to the machine

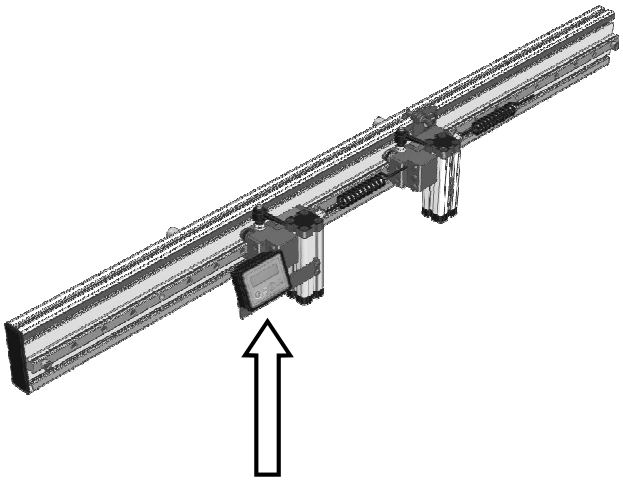

display

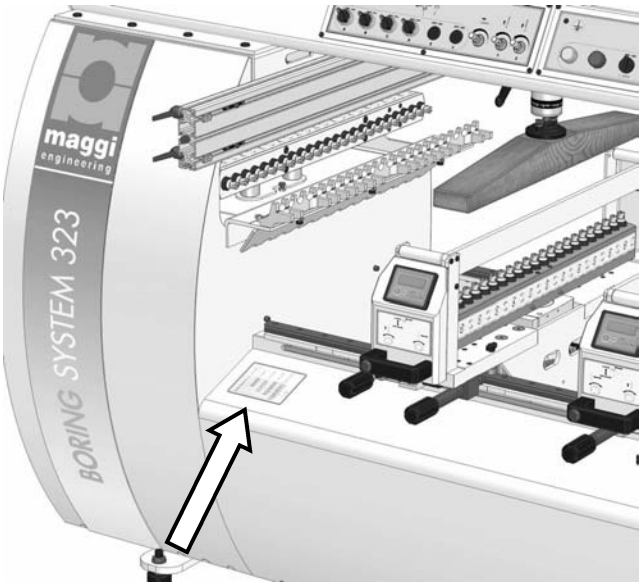

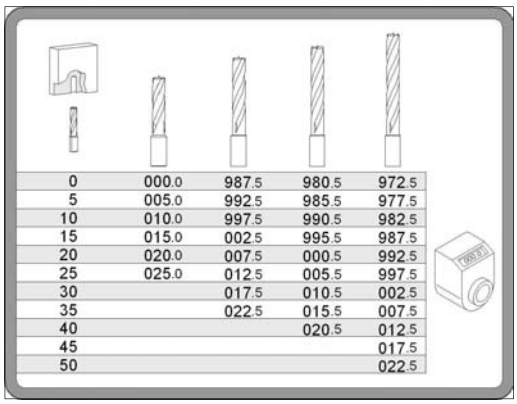

0	000.0	987.5	980.5	972.5
5	005.0	992.5	985.5	977.5
10	010.0	997.5	990.5	982.5
15	015.0	002.5	995.5	987.5
20	020.0	007.5	000.5	992.5
25	025.0	012.5	005.5	997.5
30		017.5	010.5	002.5
35		022.5	015.5	007.5
40			020.5	012.5
45				017.5
50				022.5

DEPTH TABLE STICKER

Fig. 19

17.1 OPERATING CYCLE

- Connect the line pneumatic circuit to the filter group (see fig. 19)
- Turn on the general current switch (see fig. 1) using the knob placed on the door (see fig. 19); the signal light turns on when the line is inserted (see fig. 12).
- Pull the running push-button (see fig. 12).

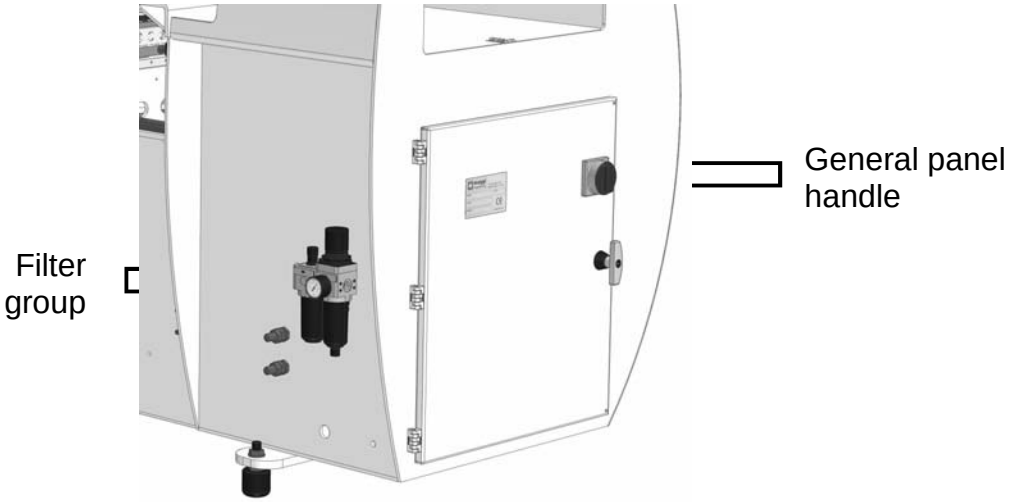

Fig. 19

17.2 HORIZONTAL VERTICAL SIMULTANEOUS DRILLING CYCLE *(synchronous cycle)*

- Turn the selector in synchronous position (see fig. 13).
- Select the heads for drilling using selectors (see fig. 9-10) placed on the control panel.
- Press the pneumatic pedal (see fig. 2).
- The clamps (see fig. 5) go down and lock the workpiece on the working table.
- The motors turn on and all the selected drilling groups move on at the same time to reach the stroke length fixed by the stroke regulator.
- At the end of the stroke the drilling group turns on an electrical end-stroke switch (see fig. 16a-16b) which turns upside-down a electrovalve, then goes back to the start position and rests.
- The pneumatic pedal must be released only after that the drilling group is in rest position. The motors stop and clamps go up unlocking the wood panel.
- The synchronous drilling cycle ends.

17.3 HORIZONTAL VERTICAL CROSSING DRILLING CYCLE *(alternate cycle)*

- Turn the selector in synchronous position (see fig. 13).
- Select the heads for drilling using selectors (see fig. 9-10) placed on the control panel.
- Press the pneumatic pedal (see fig. 2).
- The clamps (see fig. 5) go down and lock the workpiece on the working table.
- The motors turn on and all the selected drilling groups move on at the same time to reach the stroke length fixed by the stroke regulator.
- At the end of the stroke, the drilling group turns on and an electrical end-stroke switch (see fig. 16a-16b) which turns upside-down a electrovalve and goes back to the start position and rests and so doing allow the horizontal group to run.
- The horizontal head motor turns on, the drilling group moves on up to the end of the stroke fixed by the stroke regulator.
- At the end of the stroke the drilling group turns on an end-stroke switch which turns upside-down an electrovalve come back and rests.
- When the horizontal drilling group is back in rest position, release the pneumatic pedal, the motor sops and the clamps go up unlocking the wood panel.
- The alternate drilling cycle ends.

17.4 STARTING DEVICE NOTES

The starting device consists of the pedal (fig. 2) which is used to start and to stop working.
The emergency stop is guaranteed by the pneumatic pedal itself if the operator stops pressing the pneumatic pedal, the drilling cycle stops, all the control parts stop working and the drilling head goes back to the rest position (safety position the drilling tools standing still)
The motor starting device can not work if the pneumatic pedal is not pressed and works properly (there is a pressure switch is installed in the clamps circuit)
The fuses give protection against short circuits: they stop the current flow if the current value exceed a fixed limit. When this kind of protection occurs, it stops motor rotation but this does not cause any damage to the operator. Unexpected electrical power black out causes the machine switch off, stops immediately the machine itself, which can be turned on again only by pressing the start push-button.
The machine stop is achieved by pressing the stop push-button (see fig. 12) or by rotating the general switch in position 0 (see fig. 19).

18. CHECK UP AND ADJUSTMENTS

IT IS RECOMMENDED TO DISCONNECT THE ELECTRICAL AND PNEUMATIC POWER SUPPLY BEFORE TAKING ANY INTERVENTION ON THE MACHINE FOR MAINTENANCE OR FOR REPLACING DAMAGED OR WORN PARTS. FOLLOW ALL THE PROCEDURES DESCRIBED BELOW AND THE ADVICE WRITTEN IN PARAGRAPH 6 OF THIS MANUAL.

18.1 ELECTRICAL INSULATION PROCEDURE

Before starting with any maintenance operation on the machine please follow the following procedure:
1. verify that the machine is in the arranged position for the requested operation. Insulate electric and pneumatic system only after having blocked mechanically the machine in this position.
2. be sure that no any other power source is present, and that no residual power source is able to act.

It is extremely important that this procedure is performed by only one operator and he/she has to notify the machine state by putting on it a well visible tag.

18.2 PRELIMINARY CHECK UP

Check that the working area all around the machine is in order and without any residuals of machined material, as sawdust or wood pieces. Check that all the safety protection devices are positioned correctly and ready to use.

18.3 BORING DEPTH

Use a test working piece to check the adjustments of the machine before beginning to work pieces of good material.

18.4 ADJUSTING THE PARALLELISM OF SPINDLE HEADS

To adjust the parallelism using the reference stop, operate alternatively on screw (1) and nuts (2) after having partially unscrewed the screws (3) (see fig. 20-21)

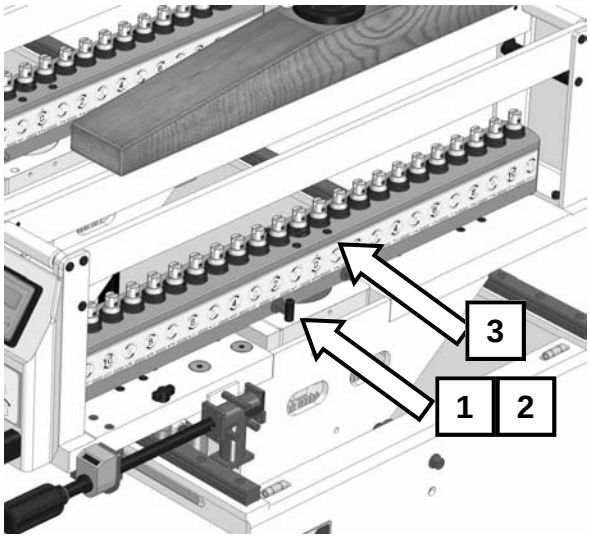

Fig. 20

Vertical Heads

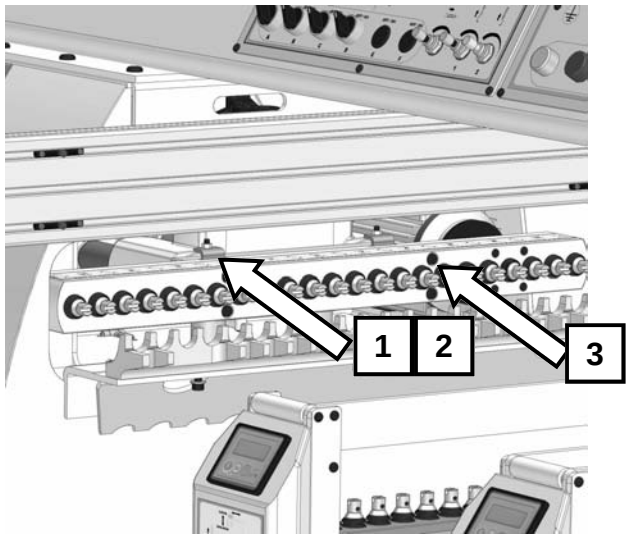

Fig. 21

Orizontal Head

19. WORKING EXAMPLES

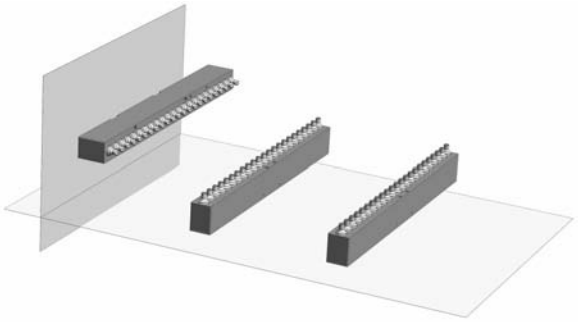

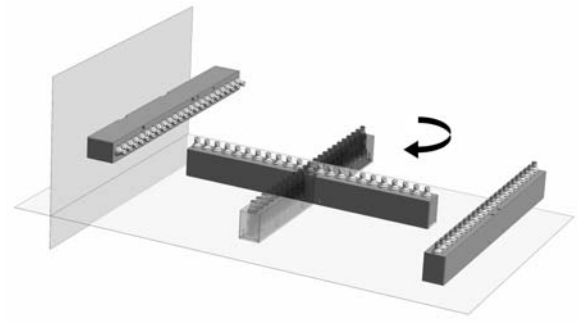

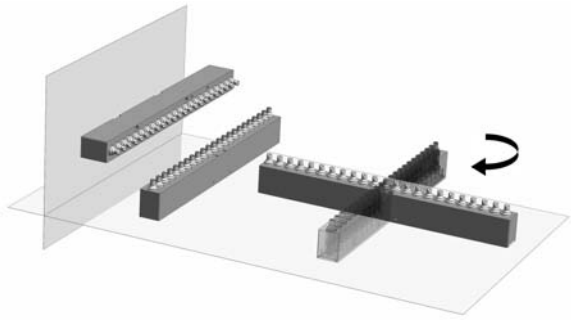

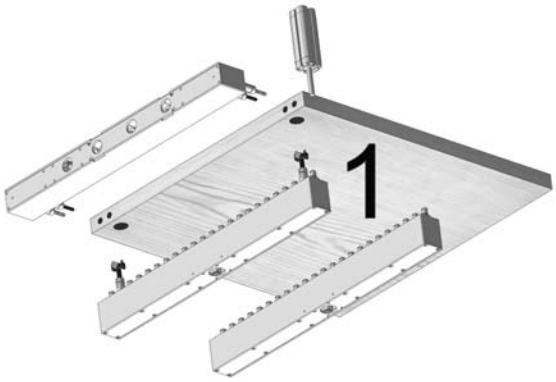

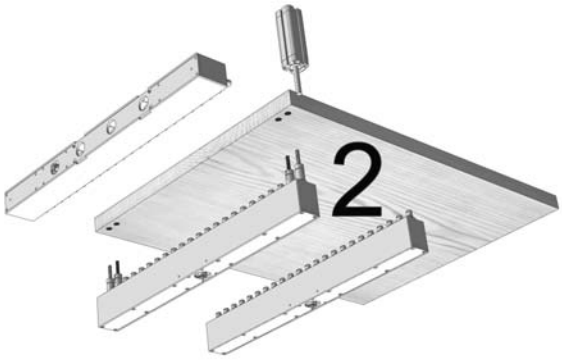

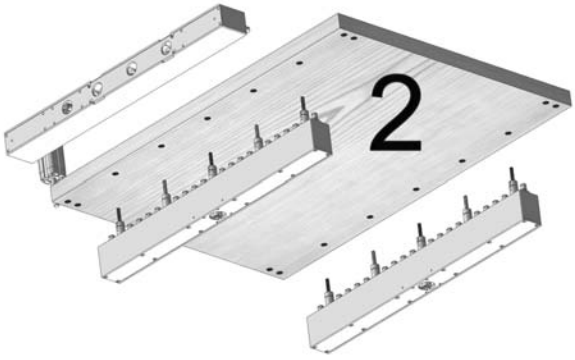

20. MAINTENANCE

20.1 ORDINARY MAINTENANCE

AN ADEQUATE MAINTENANCE IS A CRUCIAL FACTOR FOR A LONGER LIFE OF THE MACHINE, AND TO OBTAIN OPTIMAL WORKING CONDITION OF THE MACHINE ITSELF. ALL THE MAINTENANCE OPERATIONS MUST BE DONE WITH THE MACHINE TURNED OFF. WEAR ALWAYS PROTECTIVE GLOVES AND FACE-SHIELD

WARNING - DANGER OF SLIDING!
During cleaning of working area, be careful to working residuals and liquids left over the floor all around the machine: they can be dangerous for sliding of the operator.

20.2 CLEANING OF THE MACHINE (DAILY)

The machine and working area must be kept clean from working scraps and anything that could hamper the working cycle or access to the machine itself. The machine must be cleaned every day. Make sure that no material not needed by the machine can gather on it preventing safe operation and causing danger to the operator during the normal working cycle .

20.3 CLEANING OF THE GUIDES (WEEKLY)

Sliding guides and bars must be kept clean from working residuals: they can obstacle correct machine movements and damage machine efficiency. Do not use detergents or lubricants.

ELECTRICAL CABLES CHECK
Check the condition of the electric cables. Make sure there are no signs of wear, scrapes, etc.

20.4 EXTRAORDINARY MAINTENANCE

MAINTENANCE

- Check electric system safety
- Check the clamping of the various mechanical components.
- Check the lubricant oil level in the filter unit and top up if necessary.
- Make sure the machine is lubricated regularly.
- Check air pressure value: the pneumatic power supply must give air at a pressure value of 6 bar
- Check sludge: sludge and air impurity deposit into the transparent cup of air treatment group

21. COMMON FAILURES: REASONS AND REMEDIES

Some failure causes can be eliminated directly by the operator, other by qualified personnel only.

ATTENTION:
BEFORE MAKING ANY INTERVENTION IT IS OBLIGATORY TO FOLLOW CAREFULLY THE INSULATION PROCEDURE

21.1 DRILLS DO NOT WORK

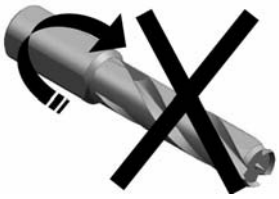

PROBABLE REASON	ACTION
A - the motor does not work B - the motor is out of service	- push the motor start push button - release the emergency push button and/or check fuse - check air pressure value (to turn on the pressure sensor) - replace the motor

21.2 THE MOTOR WORKS BUT THE DRILLS DOES NOT

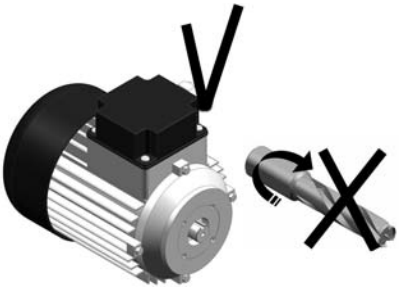

PROBABLE REASON	ACTION
A - possible failure of: - gears and/ or keys - drive joint	- replace them or call technical service

21.3 THE HOLE IS NOT ACCURATE

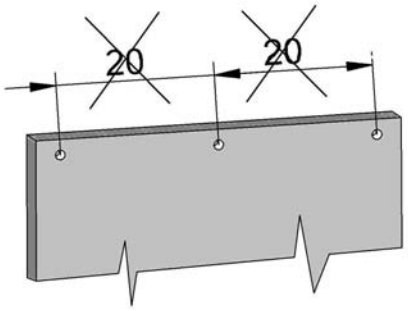

PROBABLE REASON
A - unproper drill locking
B - drill wear
C - working piece unproperly blocked

ACTION
- check locking. Call Service if the locking is good
- replace or call Service
- check clamp units, their seals and working air pressure value

22. ANOMALIES DURING ORDINARY WORKING PHASES

22.1 BURN-TRACES DUE TO DRILLS
This problem might appear when the piece is positioned incorrectly or owing to drill wear or if the drills turn in the opposite direction.

22.2 DRILLED PIECES ARE NOT PARALLEL TO THE REFERENCE BAR
This might be due to incorrect parallelism of the drills in relation to the reference stop. Check the heads in relation to the stop and the parallelism of the line of drills of head 1 with head 2.

22.3 DIFFICOLTY IN TURNING THE HEAD
If the boring unit fails to reach or finds it difficult to reach other positions, check the hinge and rod of the overturning piston

22.4 THE WORKING PIECE IS NOT BLOCKED BY THE SAFETY CLAMP
If the clamps are not clamping properly, check the air pressure and connection pipes.
To solve these problems we suggest you contact Maggi Engineering Post-Sale Service, or your local dealer.

23. NOISE EMISSION

Noise emission according to correct working of machine and balancing and grinding of tools, is variable and depends on working material, drill diameter and depth drill. The operator permanence expected time is variable during 8 hours a day. Some other factors may determinate the exposure level; the surroundings and other noise sources, and other close machines.
We suggest to inform the operators about risks caused by a prolonged exposure to noise, providing them with suitable individual protection devices. The acoustic pressure level, collected in the operator place through class 1 integrative noise meter, is 76.1 dB(A).
This measure was done according to ISO3745 rules with usual working values of speed and air pressure, drilling a shaving wood PVC covered panel. The measure was executed at 1.5 m from ground, in front of the machine, in the operator position.
Moreover the following reference measures were collected with the same procedure:
Acoustic pressure level in Atm. dB(A): 78.3
Acoustic pressure power dB(A): 93.3

24. DUST EMISSION

The following results are obtained from the determination of dust emission in 1 hour of continuous work, drilling a fir PVC covered panel 20 mm thick. Dust emission turned out 13,9 mg/N cu.m at 1,5 m from ground in front of the machine in the operator position.

25. PUTTING THE MACHINE OUT OF SERVICE

When machine has to be put out of service, please carefully follow our instructions in order to safeguard the safety of people and of environment. Firstly execute the insulation procedure, then dismantle the drills and put them into a suitable packaging box. Dismantle electric, hydraulic and pneumatic components so that you can re-use them after a check or a revision. Empty out completely from oil the hydraulic power unit, avoiding scrupulously to disperse the oil in the environment. Dismantle metal components grouping them for materials. Call a specialized company to rescue and eliminate solid and liquid materials.

26. PNEUMATIC DIAGRAM

See the pneumatic diagram as described in fig. 22

POS.	CODE	PART NAME	QUANTITY
1	00004071	PNMX 3 WAY MANIFOLD 488.03	1
2	00004016	PNMX ELECTROVALVE ECO 48852012	3
3	00001101	PNMX FITTING 01-8-1 8	8
4	00001108	PNMX FITTING 015-8-1 4	10
5	00001104	PNMX EXTENSION 07-8	6
6	00001102	PNMXT FITTING R5 8	4
7	00004067	PNMX REDUCER 08 08 04	2
8	00004068	PNMX EXTENSION 07 070400	1
9	00004065	PNMX T FITTING 05 4	6
10	00001013	PNMX FITTING 01 8 1 4	6
11	00015224	PNMX FLOW REGULATOR G1-4	6
12	00015237	PNMX PRESSURE SWITCH 250V	1
13	00001107	PNMX FEMALE STRAIGHT FITTING 02-8-1 8	1
14	00004064	PNMX SILENCER SFE14 1/4"BSP	4
15	00004013	PNMX SELECTOR 104 32 6 30 LC	4
16	00001114	PNMX L FITTING 04 4	1
17	00015231	PNMX REDUCTION FILTER 3/8 17206BBC	1
18	00015219	PNMX MANOMETER M40	1
19	00001110	PNMX L FITTINF 04-8	3
20	00015206	PNMX HEAD FEED CYLINDER	3
21	00001105	PNMX FITTING 015-8-1 8	4
22	00004001	PNMX HANDLE 105-32-6-40C	2
23	00004041	PNMX CYLINDER COD1503-25-10	4
24	00001109	PNMX WIRING SILENCER 1 8 COD.60518	12
25	00001155	PNMX FITTING 01-4-1 8	6
26	00015815	PNMX TURNING FITTING 15 150418	4
27	00004075	PNMX INTERMEDIATE STRAIGHT FITTING 03 4	4
28	00015213	PNMX CYLINDER 1561 32 75 01	4
29	00004070	PNMX INTERMEDIATE STRAIGHT FITTING Ø8	1
30	00015260	KPM PNEUMATIC PEDAL	1
31	00015902	PNMX TOP FITTING 09 090800	1
32	00001250	PNMX CYLINDRICAL FITTING 06 8 1-4	2
33	00015222	PNMX PRESSURE SWITCH CAP	1
34	00004014	PNMX CYLINDER COD1502-25-10	2

26.1 MACHINE AIR PRESSURE ADJUSTMENT

Regulate the machine air pressure between 6 bar min. and 8 bar max., checking working pressure value on the manometer.

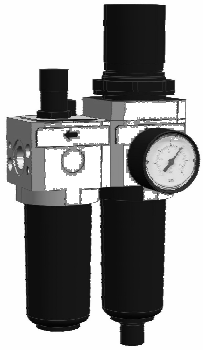

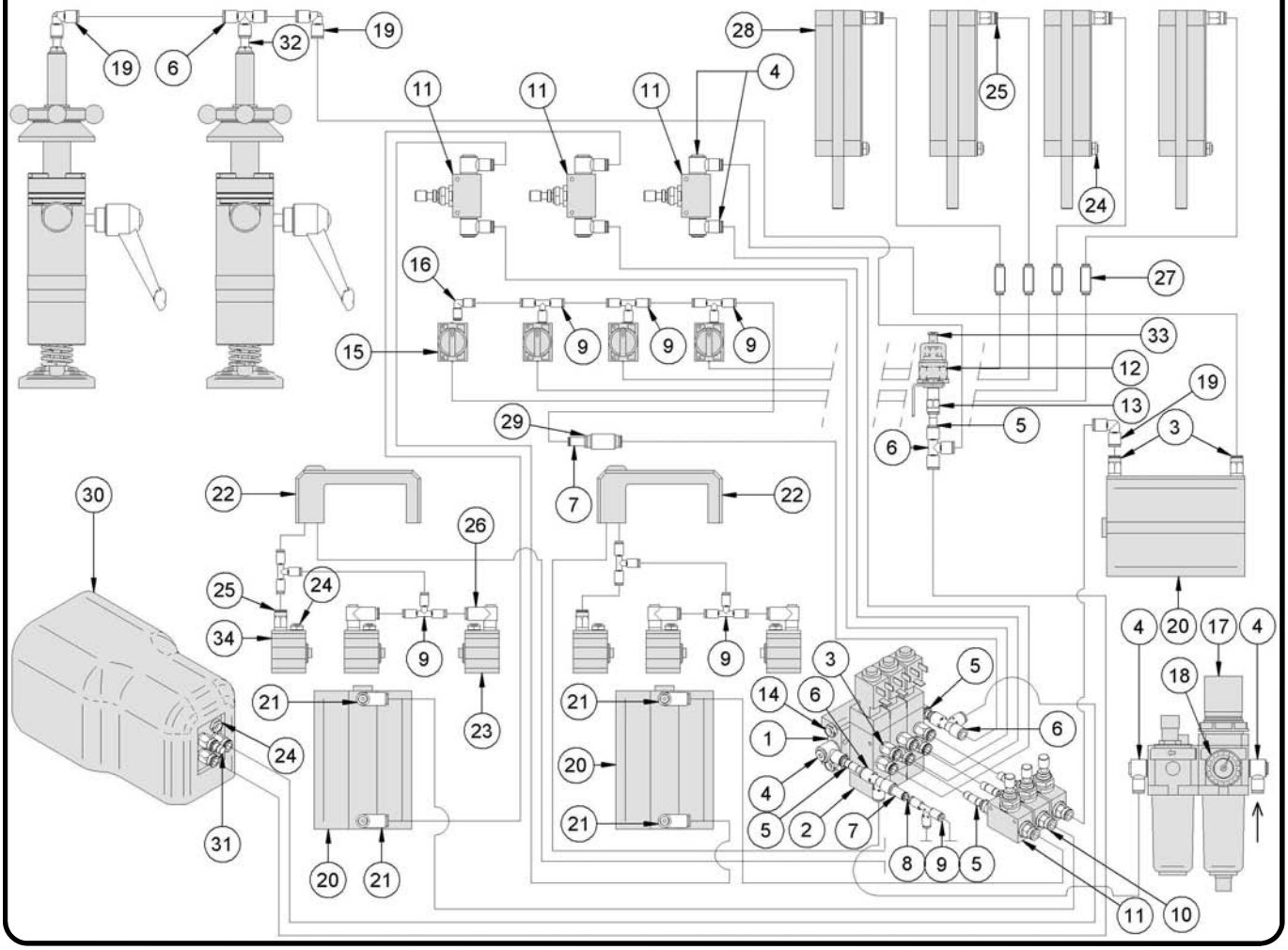

27. ELECTRICAL DIAGRAM

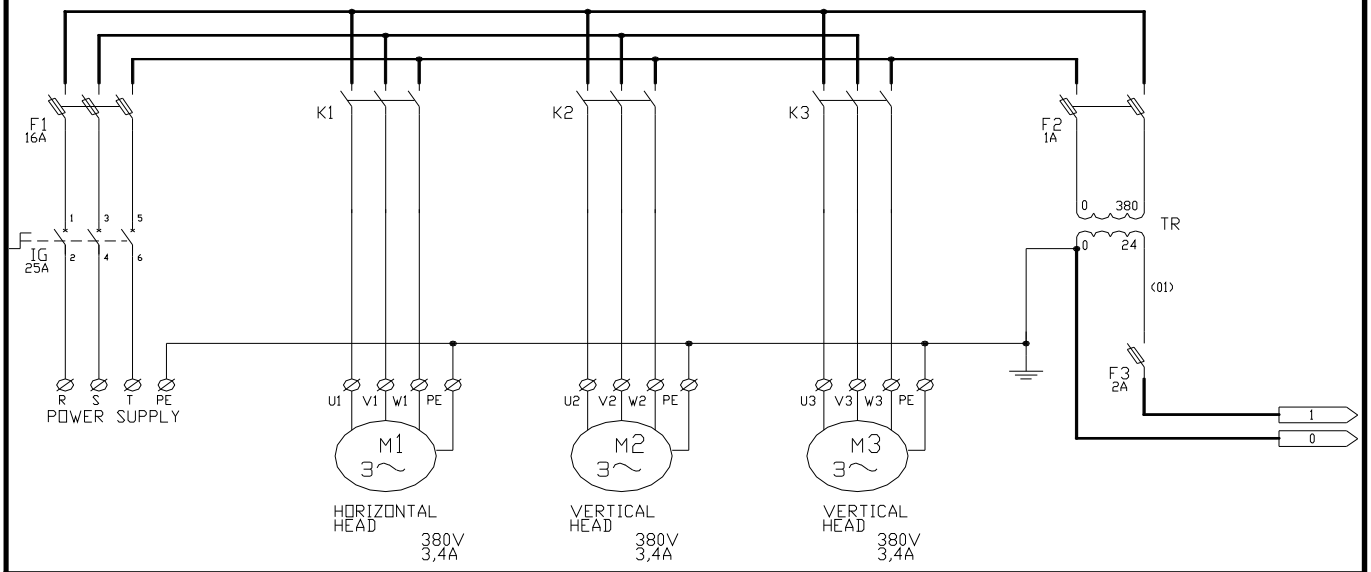

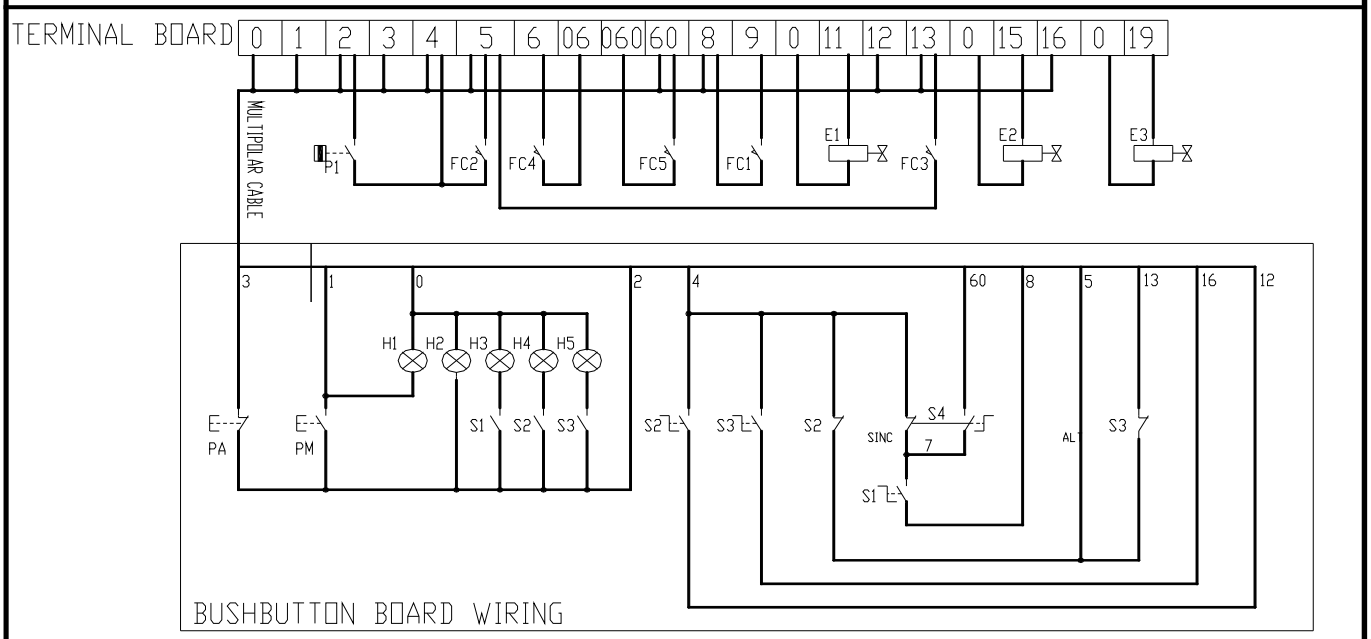

LAY OUT TERMINAL BOARD

⏚	R	S	T	U1	V1	W1	U2	V2	W2	U3	V3	W3	⏚	0	0	0	0	1	2	2	3	4	4	4	5	5	5	6	06	8	8	9	11	12	13	13	15	16	19	60	060	60

QUANTITY	ITEM	NAME	PART NAME
1			BOX 500x350x200
1		IG	YELLOW RED BADGE
1	LA2161753	IG	DOOR STOP SWITCH
1	WEPCH3X3832A	F1	FUSE HOLDER 3P 10x38 32A
1	WEPCH2X3832A	F2	FUSE HOLDER 2P 10x38 32A
1	WEPCH1X3832A	F3	FUSE HOLDER 1P 10x38 32A
3	LO11BF91024	K1-2-3	CONTACTOR 9A 1NO 24VAC
2	G48020	K2-3	CONTACT AUX
1	EZZDF2S8P	KR	RELAY BASE 10A 2 EXANGES
1	FI55328024	KR	RELAY 2 COUPLES CONTACT
3	OM10X3816A	F1	FUSE 10x38 16A
2	OM10X381A	F2	FUSE 10x38 1A
1	OM10X382A	F3	FUSE 10x38 2A
1	VE50VA	TR	TRANSF. 50VA 0-220-380/0-24-27
2	EZZA2S8P	T1-2	TIMER BASE OCTAL
2	LO31L48TB3S6	T1-2	TIMER 3s 24V
41	8WA10111DG11	MORS.	MODULAR TERMINAL 4 mm
2	EN16511417	MORS.	TERMINAL 6 mm
3	ZB5AK1233	S1-2-3	GREEN LIGHT SELECTOR 2P
3		S1-2-3	SUPPORT WITH LED
5	ZB5AZ101		CONTACT AUX NO+SUPPORT
4	ZBE101		CONTACT AUX NO
1	ZB5AD2	S4	BLACK SELECTOR 0-1
4	ZBE102		CONTACT AUX. NC
1	ZB5AS54	PA	PALM BUTTON
1		PA	EMERGENCY LABEL

QUANTITY	ITEM	NAME	PART NAME
1	ZB5AV01	H1	COLORLESS GAUGE LAMP
2	BA9.30.2	H1-2-3-4-5	LAMP 30V 2W
1	ZB5AW31		WHITE LIGHT PUSH BUTTON
2	ZB5AV6		LAMP HOLDER
3	OEOM1900.16		CABLEPRESS PG16
12	OEOM1900.13		CABLEPRESS PG13,5
6	SITOBO5XMC		PLATEHOLDER
6	SITOVO1MC		PLATEHOLDER GLASS

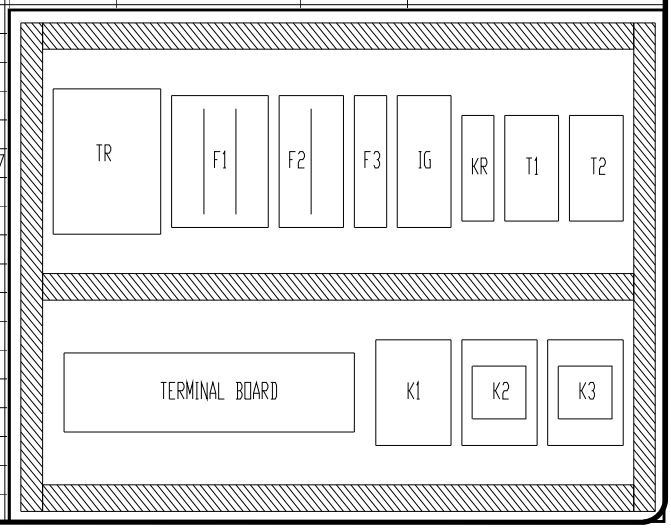

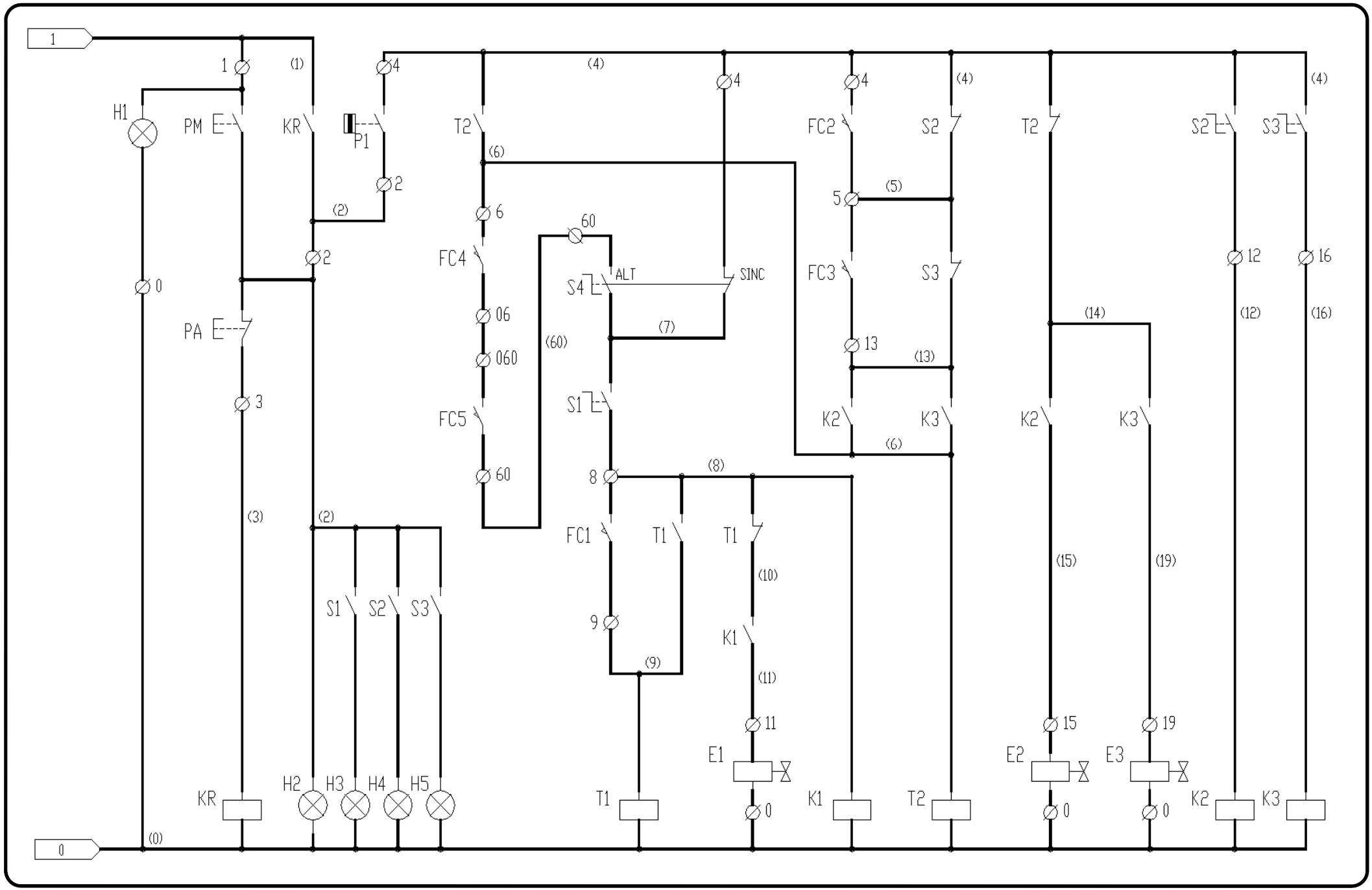
1
0
H1
PM
KR
P1
T2
FC2
S2
S3
FC4
S4
ALT
SINC
FC3
PA
FC5
S1
K2
K3
FC1
T1
K1
E1
E2
E3
H2
H3
H4
H5
(0)
(1)
(2)
(3)
(4)
(5)
(6)
(7)
(8)
(9)
(10)
(11)
(12)
(13)
(14)
(15)
(16)
(19)
(60)

NOTES

28. TERMS OF GUARANTEE

The guarantee provided with this certificate is valid for the period of one year from the date of purchase. Consequently, during such guarantee period, the manufacturer undertakes to replace any parts found to be faulty because of manufacturing defects. Only carriage expenses will be on the customer's account. The guarantee is void if the machine has been used improperly or damaged during transport.

29. GUARANTEE CERTIFICATE

The machine has been built according to technological and safety criteria and has been checked in our factory before being forwarded.

MAGGI ENGINEERING guarantees machine working and quality in agreement with law rules, for a period of 12 months. Improper use and incorrect maintenance, not following the rules contained in this manual, as well as adjustments or modifications not approved by the manufacturer, cancel all the terms of guarantee. The conditions of guarantee about the correct working of the machine are strictly connected to the respect of all the indications described in the

USE AND MAINTENANCE MANUAL

The free replacement of any parts found to be faulty is done only after having checked that the machine had been properly used.

Claims and guarantee interventions request are accepted only against presentation of the machine number engraved into the identification plate.

Upon receipt of the machine carefully check that packaging is safe and not damaged. Except for different agreement, the manufacturer is not responsible for any damages done during transport.

In case of evident damages on packaging, we suggest to contact immediately the carriers. Our firm will be available to give the necessary support.

COUPON TO BE FORWARDED TO THE MANUFACTURER

GUARANTEE AND LOOK-OVER COUPON

Model..……..Serial number……..

Name……..

Address……..

ZIP Code……....City…….

Date of purchase…… Dealer……...

Owner's signature

……..

The purchaser states to accept all the terms of guarantee and to have checked the machine to work well

NOTES

Send to:

Vendita ed Assistenza Tecnica

Via delle Regioni n°299

50052 CERTALDO (Fi)

ITALIA

30. SPARE PARTS CATALOGUE

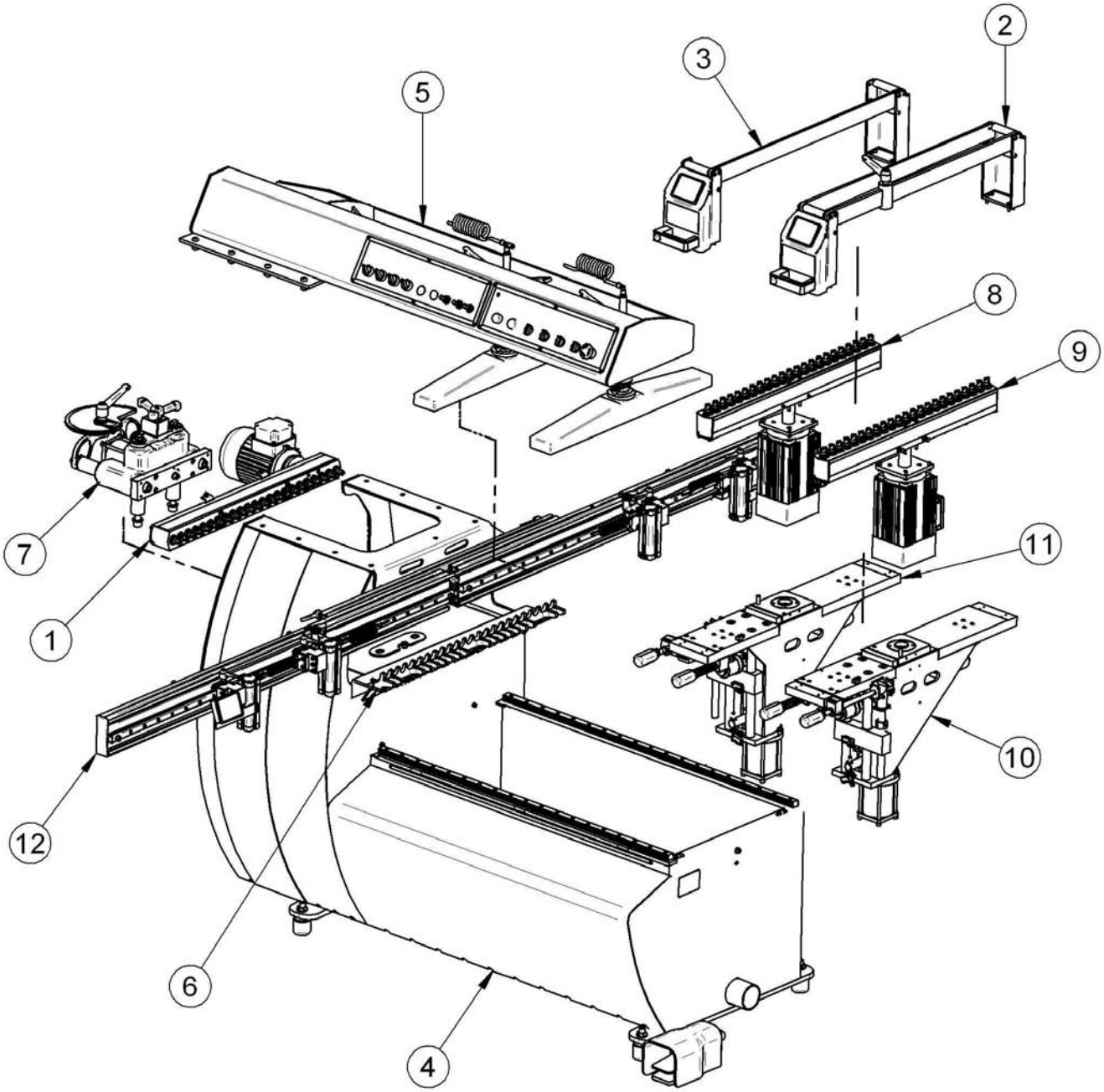

POS.	CODE	PART NAME	QUANTITY
1	26052700	HORIZONTAL HEAD GROUP 23	1
2	26803200	RIGHT TABLE GROUP	1
3	26803201	LEFT TABLE GROUP	1
4	26830006	BOTTOM FRAME GROUP 323	1
5	26830100	UPPER FRAME GROUP 323	1
6	26830300	REFERENCE DOUBLE LIMITER UNIT	1
7	26830500	HORIZONTAL HEAD HOLDER BLOCK GROUP	1
8	26830800	VERTICAL HEAD GROUP	1
9	26830801	VERTICAL HEAD GROUP	1
10	26831400	VERTICAL RIGHT HEAD HOLDER BLOCK	1
11	26831401	VERTICAL LEFT HEAD HOLDER BLOCK	1
12	26831600	LONG FENCE GROUP	1

26830006 BOTTOM FRAME GROUP 323

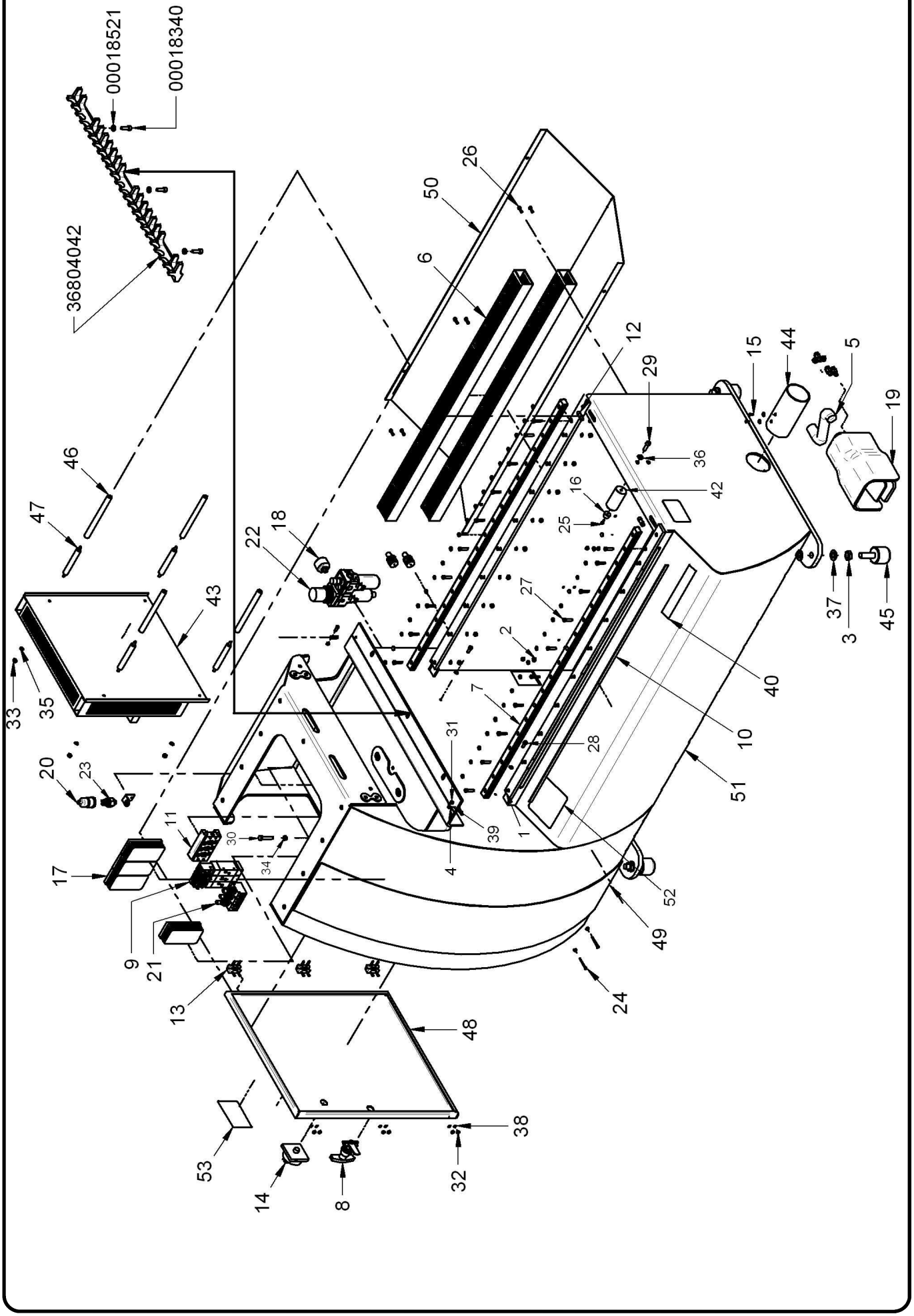

26830006 BOTTOM FRAME GROUP 323

POS.	CODE	PART NAME	QUANTITY
1	00000041	SCHNOR WASHER M6	40
2	00000043	WASHER Ø5	6
3	00000123	NUT M16 UNI-5589 6S	8
4	00000139	NUT M5 UNI-5588 6S	9
5	00001124	SHEATH BTM25	1
6	00002034	CHANNEL 40x60	2
7	00003040	SLIDEWAY AGH-25CA	2
8	00003983	ELESA 421513 CSUM50+PRL421140	1
9	00004016	PNMX ELECTROVALVE ECO 48852012	3
10	00004060	ELGO MAGNETIC BAND MB 2025010	1
11	00004071	PNMX MANIFOLD 488.03	1
12	00004500	LEVEL D-9,8x30 COD_F10	4
13	00005006	ELESA 423621 CFF40P M4 x 18	3
14	00005091	MAIN SWITCH	1
15	00005104	SCREW Dia.3,9x13	2
16	00005201	RUBBER SUPPORT	1
17	00008021	GAMM CAP TR 7371102 TR/120x60	4
18	00015219	MANOMETER M40	1
19	00015220	PEDAL ART-228-52-10-2-1	1
20	00015222	CAP	1
21	00015224	PNMX FLOW REGULATOR 1/4	3
22	00015231	PNMX REDUCTION FILTER +L 3/8 17206BBC	1
23	00015237	PNMX PRESSURE SWITCH 250V	1
24	00018289	SCREW VTCEI M4X40 UNI-5931	2
25	00018290	SCREW VTCEI M4x12	1
26	00018299	SCREW VTCEI M5x16 UNI5931	6
27	00018304	SCREW VTCEI M6X25 UNI-5931	19
28	00018325	SCREW VTCEI M6X16 UNI-5931	4
29	00018340	SCREW VTCEI M8X25 UNI-5931	1
30	00018433	SCREW VTE M8x40 UNI5739	1
31	00018467	SCREW VTE M 5x16 UNI-5739	2
32	00018499	NUT M4 UNI-5588 6S	14
33	00018500	NUT M6 UNI-5588 6S	24
34	00018502	NUT M8 UNI-5589 6S	1
35	00018520	WASHER Ø6 UNI-6592	10
36	00018521	WASHER Ø8 UNI-6592	1
37	00018524	WASHER Ø17 UNI-6592	8
38	00018531	WASHER Ø4 UNI-6592	12
39	36002078	ALIGNEMENT THREADED PIN	2
40	36050505	WARNING PLATE 200x30	1
41	36054016	GENERAL WARNINGS PLATE 150x90	1
42	36800045	PIN	1
43	36800092	ELECTRIC BOARD BORING 323	1
44	36800707	EXIT PIPE	1
45	36801004	FEET	4
46	36801031	SPACER	4
47	36802031	SPACER	4
48	36802711	ELECTRIC BOARD DOOR	1
49	36804023	BS323 PLATE	1
50	36805012	LONG COVER	1
51	36806006	BEDFRAME 323	1
52	36830001	DEPTH STICKER	1
53	40000030	3M PLATE 68x46 3690-906	1

26830100 UPPER FRAME GROUP 323

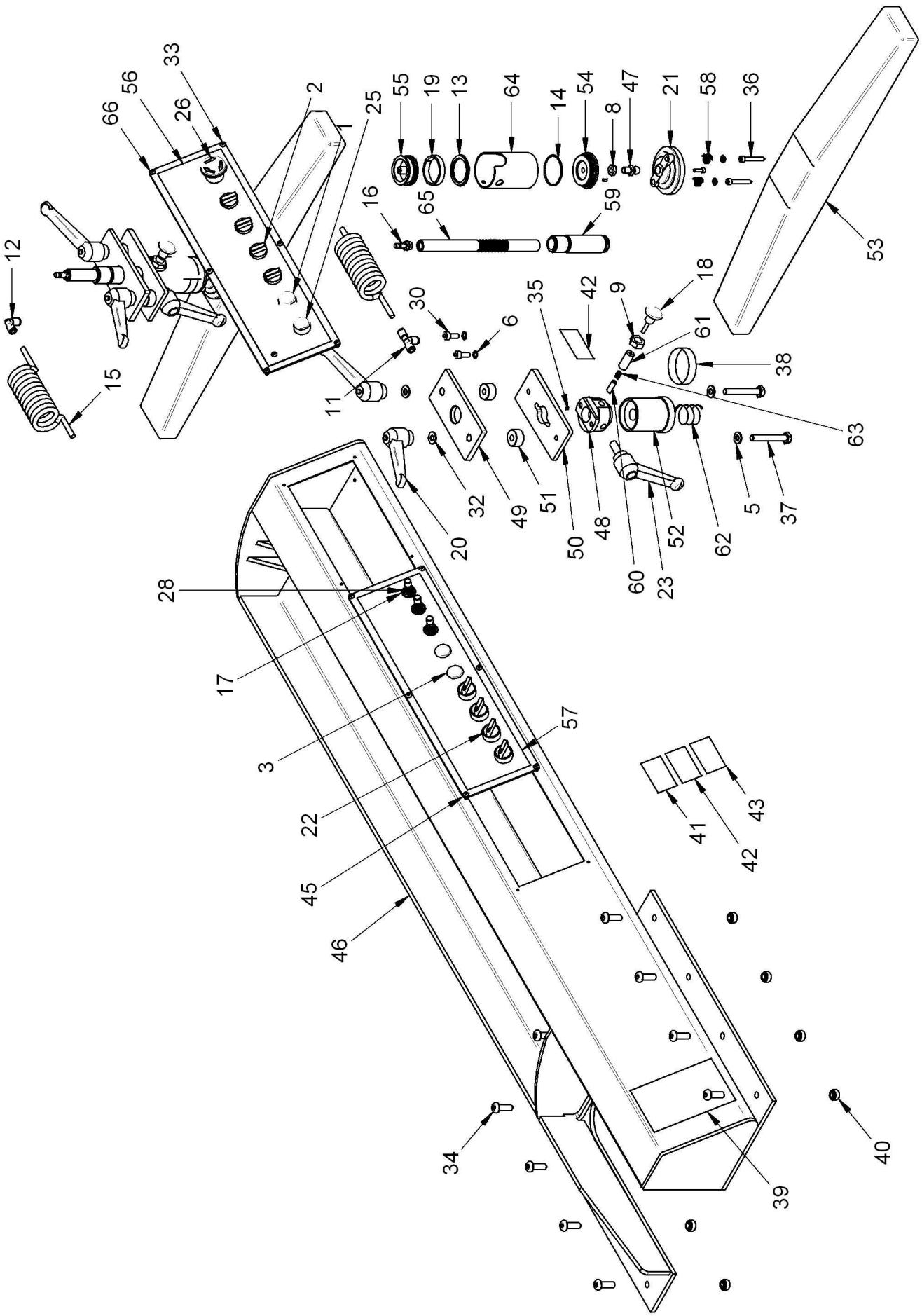

26830100 UPPER FRAME GROUP 323

POS.	CODE	PART NAME	QUANTITY
1	-	START PUSH BUTTON	1
2	-	ELECTRIC SELECTOR	4
3	-	PLUG Ø23	2
4	-	LF2301-8 123	2
5	00000021	WASHER Ø10 UNI-6592	4
6	00000042	SCHNOR WASHER Ø8	4
7	00000043	WASHER Ø5	1
8	00000113	NUT M10 UNI-5589 6S	2
9	00000118	NUT M14 UNI-5589 6S	2
10	00000139	NUT M5 UNI-5588 6S	1
11	00001102	PNMX T UNION R5 8	1
12	00001110	PNMX L UNION ART 04-8	1
13	00001120	PISTON SEAL	2
14	00001121	PNMX OR COD R-1502.50.5	2
15	00001126	SPIRAL PIPE	2
16	00001250	PNMX UNION ART_06_8_1-4	2
17	00002015	WASHER PS 17x24x1	3
18	00003120	BOTECO 119-32 M6	2
19	00003600	POLYPACK E-DWR50	2
20	00003934	BOTECO 522-104 M10	4
21	00004006	ELESA COD. 301331	2
22	00004013	PNMX SELECTOR 104 32 6 30 LC	4
23	00004026	SNAP LEVER M12x30	2
24	00004306	ELASTIIC TORN 4x8 6873	4
25	00005093	LINE INDICATOR	1
26	00005094	EMERGENCY PUSH BUTTON 020PTAARK	1
27	00005103	SCREW Ø3.9x9.5 6955	2
28	00015224	PNMX FLOW REGULATOR G1-4	3
29	00018299	SCREW VTCEI M5x16 UNI5931	2
30	00018322	SCREW VTCEI M8X20 UNI-5931	4
31	00018520	WASHER Ø6 UNI-6592	4
32	00018522	WASHER Ø10 UNI-6592	4
33	00018558	SCREW VTBCEI M5x10 ISO 7380	13
34	00018602	SCREW VTBCEI M10X30 ISO-7380	9
35	00120404	SCREW VSTEI M4X4 UNI-5923	2
36	00171010	SCREW Ø6x45 DIN571	4
37	00361013	SCREW VTE M10x70	4
38	32700000	PISTON STICKER	2
39	36050005	WARNING 100x150	1
40	36050011	PRESS NUT	9
41	36050506	WARNING 70x35	1
42	36050507	WARNING 70x35	3
43	36050509	WARNING 70x35	1
44	36054018	WARNING 30x30	2
45	36800120	PNEUMATIC CONTROL PANEL	1
46	36802101	UPPER BEAM	1
47	36802435	PIN M10	2
48	36805088	SLIDING HEAD 323	2
49	36805102	UPPER PLATE	2
50	36805103	LOWER PLATE	2
51	36805104	SPACER	4
52	36805106	CILYNDER	2
53	36805117	WOOD SUPPORT	2
54	36805125	LOWER HEAD	2
55	36806105	PISTON	2
56	46800123	ELECTRIC PANEL STICKER	1
57	46800124	PNEUMATIC PANEL STICKER	1
58	46800436	PISTON SPRING	4
59	49901089	HEAD TUBE	2
60	49970047	PISTON	2
61	49970048	THREADED CYLINDER	2
62	49970053	PISTON SPRING	2
63	49970146	PISTON SPRING	2
64	49971042	CYLINDER CAP	2
65	49980043	PISTON STEM	2
66	76800119	ELECTRIC CONTROL PANEL	1

26803200 RIGHT TABLE GROUP

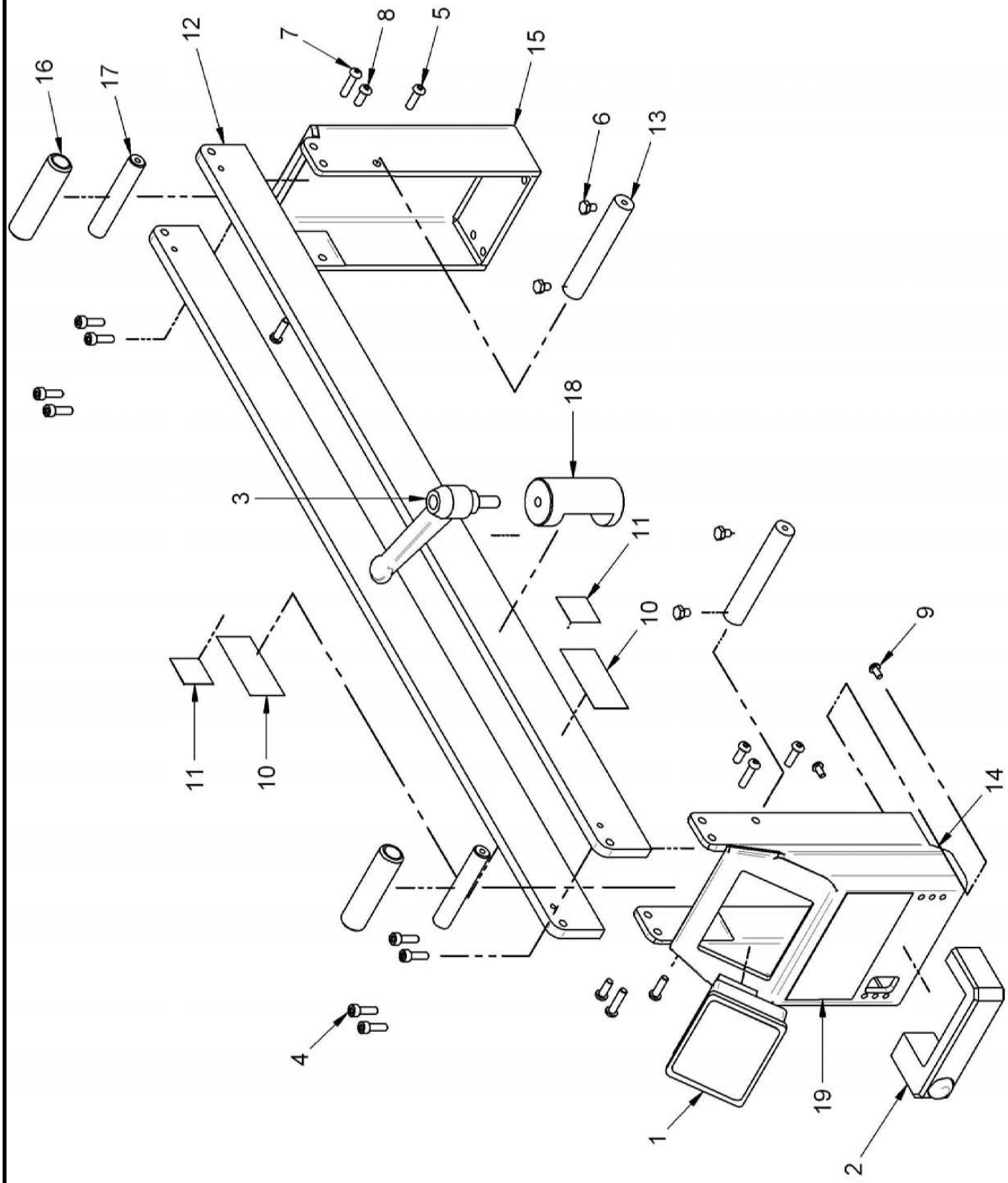

26803200 RIGHT TABLE GROUP

POS.	CODE	PART NAME	QUANTITY
1	00004003	ELGO DISPLAY MS Z-16 20-25 CAVO MM	1
2	00004019	PNMX HANDLE 3/2-105-32-6-40A	1
3	00004027	SNAP LEVER M10x25 ART_563-65	1
4	00018303	SCREW VTCEI M6x20	8
5	00018431	SCREW VTBCEI M6X20 ISO-7380	4
6	00018436	SCREW VTE M6x8 UNI5739	4
7	00018461	SCREW VTBCEI M6X25 ISO-7380	4
8	00018462	SCREW VTBEI M6x16 ISO7380	4
9	00018558	SCREW VTBCEI M5x10 ISO 7380	2
10	36050507	WARNING STICKER 70x35	2
11	36054018	WARNING STICKER 30x30	2
12	36800208	TABLE POLE	2
13	36802205	BORED CROSSBAR	2
14	36803204	VISUAL DISPLAY HOLDER	1
15	36803206	BACK TABLE HOLDER	1
16	46800210	TABLE ROLL	2
17	46800211	PIN	2
18	46800214	SUPPORT	1
19	46802208	DEPTH STICKER	1

26803201 LEFT TABLE GROUP

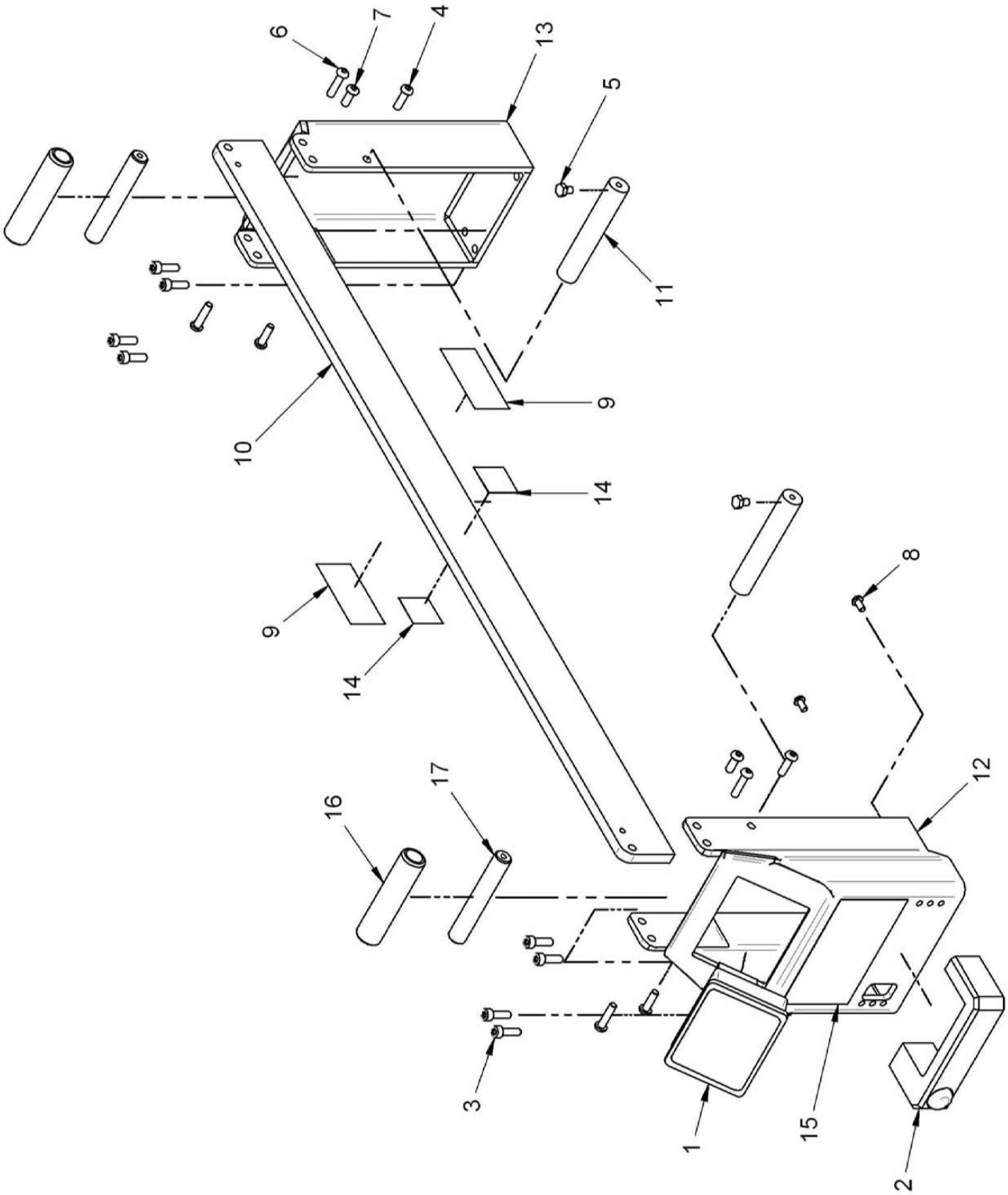

26803201 LEFT TABLE GROUP

POS.	CODE	PART NAME	QUANTITY
1	00004003	ELGO MS Z-16 20-25 MM	1
2	00004019	PNMX HANDLE 3/2-105-32-6-40A	1
3	00018303	SCREW VTCEI M6x20	8
4	00018431	SCREW VTBCEI M6X20 ISO-7380	4
5	00018436	SCREW VTE M6x8 UNI5739	2
6	00018461	SCREW VTBCEI M6X25 ISO-7380	4
7	00018462	SCREW VTBEI M6x16 ISO7380	2
8	00018558	SCREW VTBCEI M5x10 ISO 7380	2
9	36050507	WARNING STICKER 70x35	2
10	36800208	TABLE POLE	1
11	36802205	BORED CROSSBAR	2
12	36803204	VISUAL DISPLAY HOLDER	1
13	36803206	BACK TABLE HOLDER	1
14	36900200	DANGER STICKER	2
15	46802207	LH DEPTH STICKER	1
16	46802212	TABLE ROLL	2
17	46802213	ROLL PIN	2

26831400/1 VERTICAL RIGHT / LEFT HEAD HOLDER BLOCK

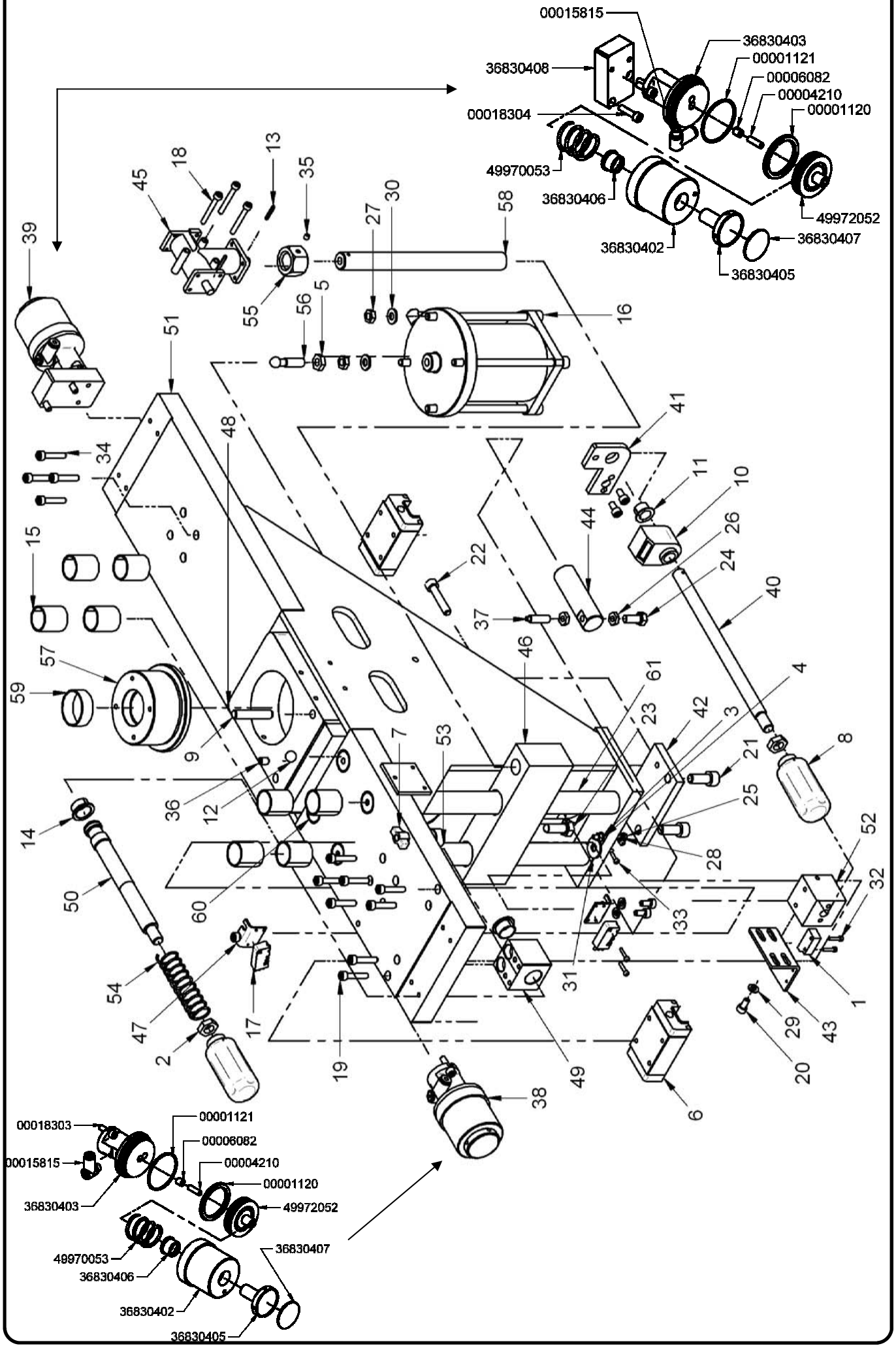

26831400/1 VERTICAL RIGHT / LEFT HEAD HOLDER BLOCK

POS.	CODICE	DENOMINAZIONE	QUANTITA'
1	-	INTEGRATED ELGO SENSOR	1
2	00000116	NUT M12 UNI-5589 6S	2
3	00000139	NUT M5 UNI-5588 6S	1
4	00000140	WASHER Ø5 UNI-6592	1
5	00000180	NUT M10 UNI-5589 6S	1
6	00003049	RUNNER BLOCK EGH 25C (A-Z0-H)	2
7	00003913	SCREW L749-28 M6X40	1
8	00003940	BOTECO 775-38 M12	2
9	00004032	CYLINDRICAL PIN Ø10x50	1
10	00004061	ELESA COUNTER VO-DX 2,5 AR-F14	1
11	00004062	SKF BEARINGS PCFM141612	1
12	00004105	BALL Ø12	4
13	00004289	PIN 3x20 DIN1473	2
14	00005010	BUSHING FMB-18-12-DU	2
15	00005045	PAP BUSCHING 2530P10	8
16	00015415	DRILL FEEDING CYLINDER	1
17	00015602	MATSUSHITA ABV1210618	2
18	00018292	SCREW VTCEI M5x40 UNI5931	3
19	00018318	SCREW VTCEI M6x30	4
20	00018333	SCREW VTCEI M6X12	6
21	00018359	SCREW VTCEI M10x25 UNI5931	2
22	00018377	SCREW VTCEI M8X40 UNI-5931	1
23	00018402	SCREW VTE M10x25	1
24	00018415	SCREW VTE M8X20 UNI-5739	1
25	00018468	SCREW VTE M 5X40 UNI-5739	1
26	00018502	NUT M8 UNI-5589 6S	2
27	00018505	NUT M8	2
28	00018511	NUT M3 UNI5587	3
29	00018520	WASHER Ø6 UNI-6592	3
30	00018521	WASHER Ø8 UNI-6592	2
31	00018527	WASHER Ø8x24	1
32	00020500	SCREW VTCEI M3x15	5
33	00020501	SCREW VTCEI M3x20 UNI5931	1
34	00040611	SCREW VTCEI M6x30 UNI-5931 12.9	8
35	00130501	SCREW VSTEI M5X5 UNI-5923	1
36	00150804	SCREW VSTEI M8x12 UNI-5927	4
37	00150811	SCREW VTSTEI M8x30	1
38	26830404	FRONT BRAKE UNIT	1
39	26830409	REAR BRAKE UNIT	1
40	36800421	HANDLE HOLDER	1
41	36800428	COUNTER SUPPORT	1
42	36802413	PLATE SPACER	1
43	36802416	MAGNETIC HANDLE SUPPORT	1
44	36802422	STOP PIN	1
45	36802430	MONDIAL TN1112	1
46	36802439	DEPTH RUNNER BLOCK	1
47	36802440	SENSOR SUPPORT	2
48	36804437	SENSOR SUPPORT	1
49	36804442	ADJUSTEMENT BLOCK	1
50	36804443	HANDLE HOLDER	1
51	36806409 / 36806408	RH / LH VERTICAL HEAD STAND BLOCK	1
52	36830415	LH MOVEMENT HOLDER	1
53	36830416	MAGNETIC HANDLE SUPPORT	1
54	36900032	SPRING	1
55	36900111	BORED NUT M20	1
56	46800412	PIN	1
57	46800414	ROTATION SUPPORT	1
58	46800420	DEPTH SCREW	1
59	46800429	CENTER RING	1
60	46802410	CARBURIZING RAIL Ø25	2
61	46802417	RECTIFIED RAIL Ø25	2

26830500 HORIZONTAL HEAD HOLDER BLOCK GROUP

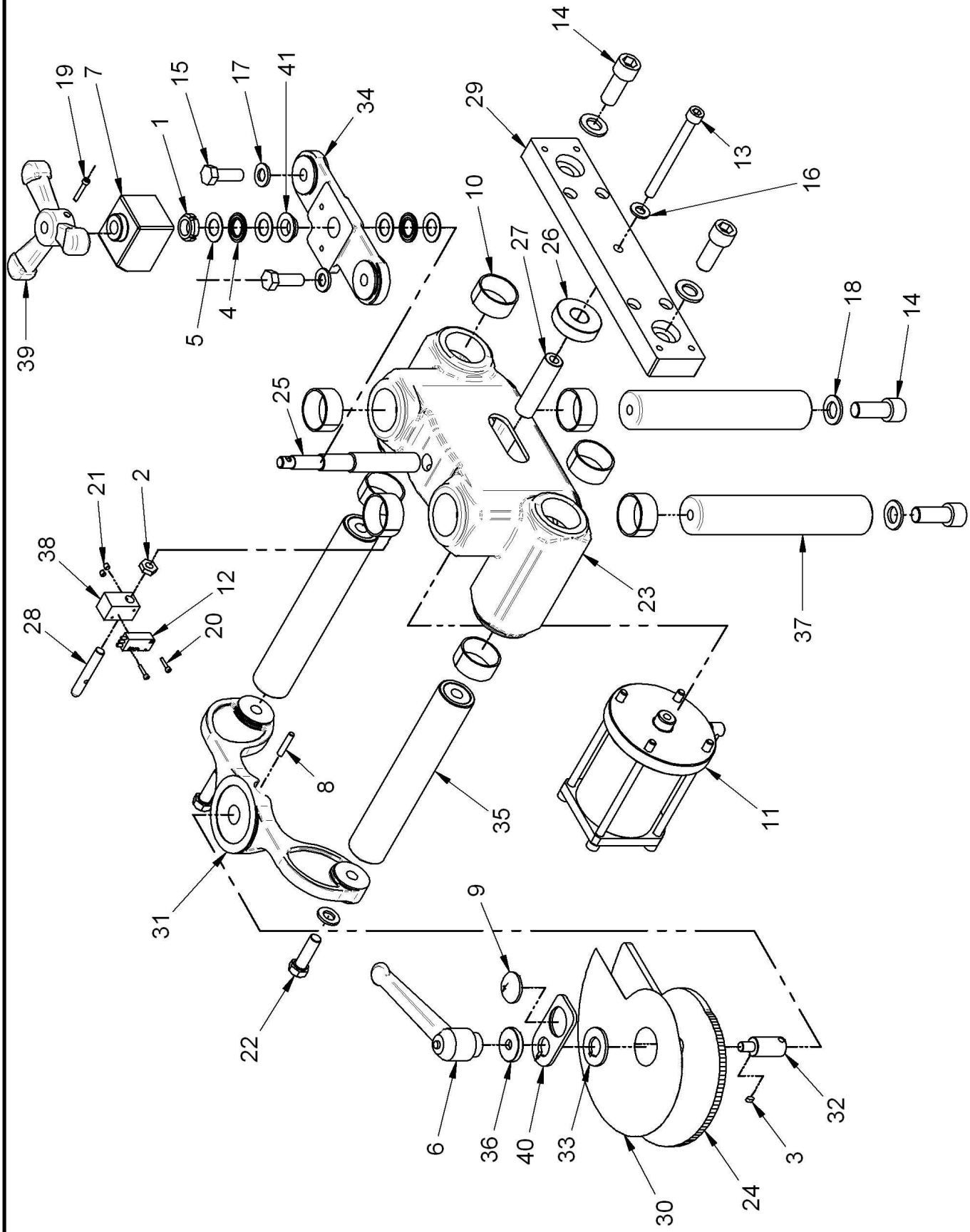

26830500 HORIZONTAL HEAD HOLDER BLOCK GROUP

POS.	CODE	PART NAME	QUANTITY
1	00000168	SEL LOCKING NUT M17x1	1
2	00000180	NUT M10 UNI-5589 6S	1
3	00000236	PARALLEL KEY 4x4x8 UNI 6604 A	1
4	00003455	INA BEARING AXK1730	2
5	00003456	INA RING AS 1730	4
6	00003934	BOTECO 522-104 M10	1
7	00003960	COUNTER	1
8	00004212	CYLINDRICAL PIN Ø6x30	1
9	00004321	LOBRE LENS Ø32 R20 F38	1
10	00005047	BEARING PAP 4020P10	8
11	00015415	DRILL FEED CYLINDER	1
12	00015602	MATSUSHITA ABV1210618	1
13	00018313	SCREW VTCEI M10X110 UNI-5931	1
14	00018314	SCREW VTCEI M16x40 UNI5931	4
15	00018403	SCREW VTE M12X35 UNI-5739	2
16	00018522	WASHER Ø10 UNI-6592	1
17	00018523	WASHER Ø13 UNI-6592	4
18	00018524	WASHER Ø17 UNI-6592	4
19	00020410	SCREW VTCEI M4x25	1
20	00020500	SCREW VTCEI M3x15	2
21	00130501	SCREW VSTEI M5X5 UNI-5923	2
22	00361020	SCREW VTE M12x40 UNI-5737	2
23	36000009	HEAD SUPPORT	1
24	36000046	DEPTH SPIRAL STOP	1
25	36000050	LIFTING SCREW	1
26	36000053	RUBBER STOP	1
27	36000111	CYLINDER STEM EXTENSION	1
28	36003124	SPIRAL STOP	1
29	36050400	HEAD HOLDER PLATE	1
30	36054403	SPIRAL PLATE	1
31	36090401	SPIRAL SUPPORT	1
32	36090405	SPIRAL HOLDER	1
33	36090406	THICKNEES LENS WASHER	1
34	36090407	SCREW LIFTER CROSSBEAM	1
35	36250407	HORIZONTAL ROLLING FENCE	2
36	36251403	SPIRAL WASHER	1
37	36800501	VERTICAL ROLLING FENCE	2
38	36800504	FINECORSA SUPPORT	1
39	36800506	BOTECOPLAST 3 ARM HANDWHEEL	1
40	36830505	Ø32 LENS HOLDER	1
41	41600004	SINTEREDED BUSH	1

26052700 HORIZONTAL HEAD GROUP 23

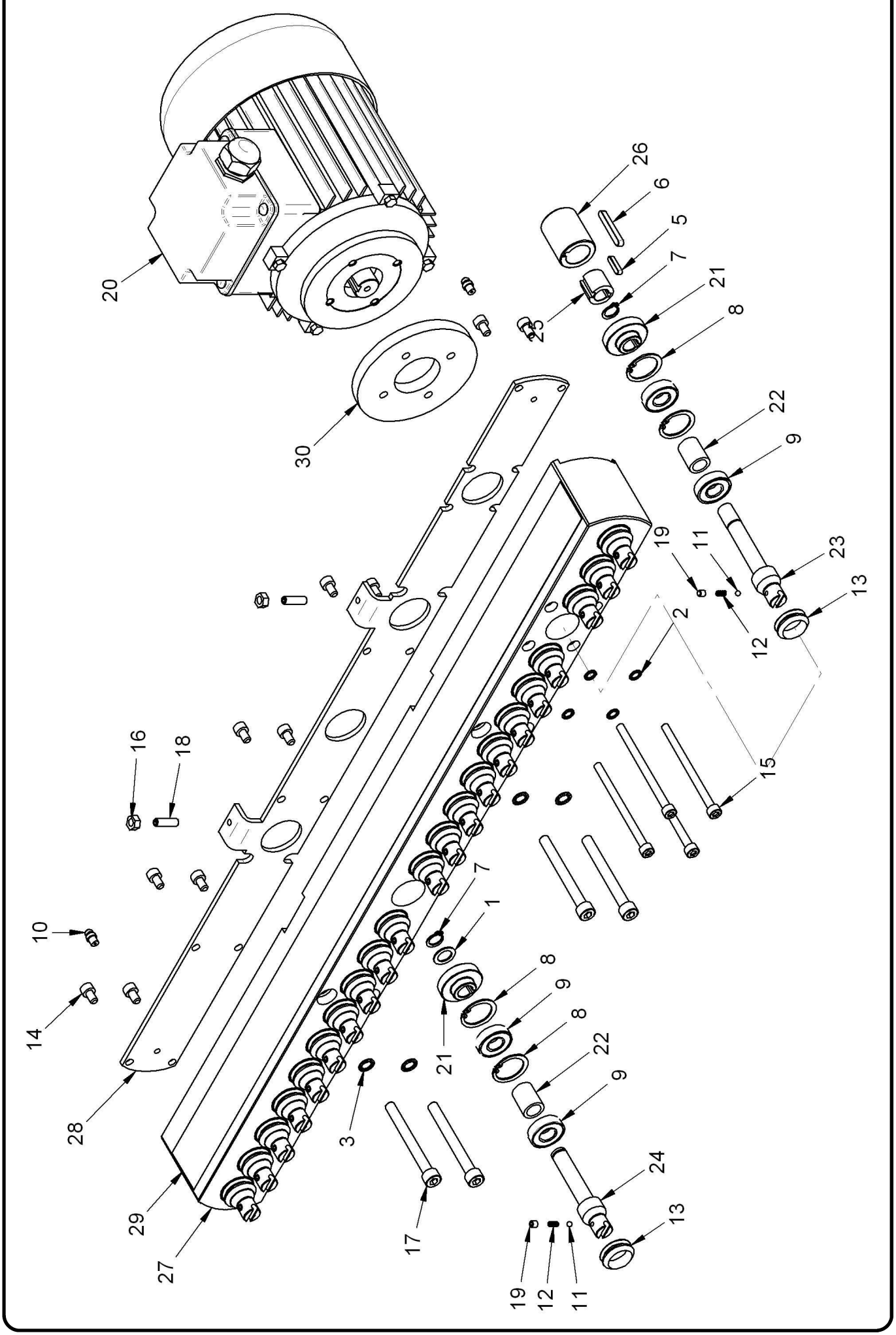

26052700 HORIZONTAL HEAD GROUP 23

POS.	CODE	PART NAME	QUANTITY
1	00000037	WASHER Ø12X18X1	22
2	00000041	SCHNOR WASHER M6	4
3	00000042	SCHNOR WASHER Ø8	4
4	00000211	PARALLEL KEY 4x4x12 UNI-6604 A	23
5	00000250	PARALLEL KEY 4x4x18	1
6	00000251	PARALLEL KEY 5x5x36	1
7	00003305	SEEGER E12	23
8	00003337	SEEGER I 28	46
9	00003424	SKF BEARING 6001 2RS1	46
10	00003703	LUBRICATOR	2
11	00004103	BALL 1 / 8	23
12	00005025	SPRING Ø 4 L.= 9	23
13	00005097	GASKET Øi 20 Øe 25,5	23
14	00018302	SCREW VTCEI M6X10 UNI-5931	10
15	00018305	SCREW VTCEI M6X90 UNI-5931	4
16	00018500	NUT M6 UNI-5588 6S	2
17	00018655	SCREW VTCEI M8x75 UNI-5931	4
18	00100614	SCREW VSTEI M6X20 UNI-5923	2
19	00130501	SCREW VSTEI M5X5 UNI-5923	23
20	26251701	MOTOR M802T 230-400-50 2HP	1
21	36000062	Z21 GEAR	23
22	36000063	BEARINGS SPACER	23
23	36001059	DRIVING SPINDLE	1
24	36001060	DRIVEN SPINDLE	22
25	36050711	NYLON JOINT	1
26	36050712	MOTOR JOINT	1
27	36052702	23 CAST IRON HEAD	1
28	36052703	23 HEAD COVER	1
29	36052710	23 PLATE	1
30	36250703	ENGINE ROUND PLATE	1

26830800 VERTICAL HEAD GROUP

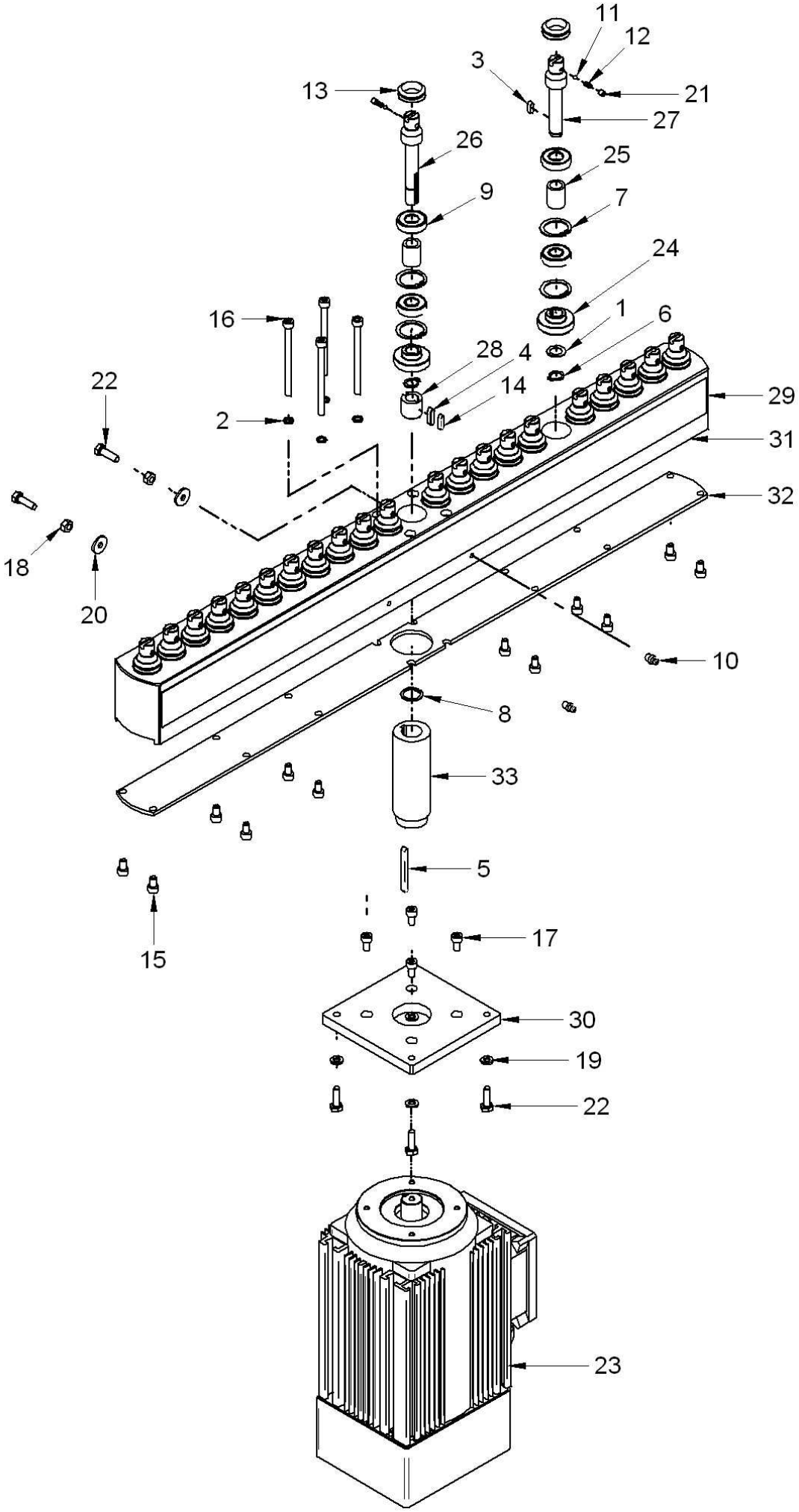

26830800 VERTICAL HEAD GROUP

POS.	CODE	PART NAME	QUANTITY
1	00000037	WASHER Ø12X18X1	22
2	00000041	SCHNOR WASHER M6	4
3	00000211	PARALLEL KEY 4x4x12 UNI-6604 A	22
4	00000220	PARALLEL KEY 5X5X18	1
5	00000222	PARALLEL KEY 5x5x50	1
6	00003305	SEEGER E12	23
7	00003337	SEEGER I 28	46
8	00003352	SEEGER I20	1
9	00003424	BEARING 6001 2RS1	46
10	00003703	LUBRICATOR	2
11	00004103	BALL 1 / 8	23
12	00005025	SPRING Ø4 L=9	23
13	00005097	GASKET Øi 20 Øe 25,5	23
14	00015820	PARALLEL KEY 4x4 L=16 UNI 6604-69	1
15	00018302	SCREW VTCEI M6X10 UNI-5931	12
16	00018326	SCREW VTCEI M6X80 UNI-5931	4
17	00018333	SCREW VTCEI M6X12	4
18	00018500	NUT M6 UNI-5588 6S	2
19	00018520	WASHER Ø6 UNI-6592	4
20	00018526	WASHER Ø6x18 UNI3351	2
21	00130501	SCREW VSTEI M5X5 UNI-5923	23
22	00340607	SCREW VTE M6x20	6
23	26000001	MOTOR EM63/71 V.230-400-50	1
24	36000062	Z21 GEAR	23
25	36000063	BEARINGS SPACER	23
26	36001059	DRIVING SPINDLE	1
27	36001060	DRIVE SPINDLE	22
28	36050711	NYLON JOINT	1
29	36052710	23 PLATE	2
30	36800801	ENGINE PLATE	1
31	36804802	23 HEAD	1
32	36804803	23 COVER HEAD	1
33	46800805	MOTOR JOINT	1

26831600 LONG FENCE GROUP

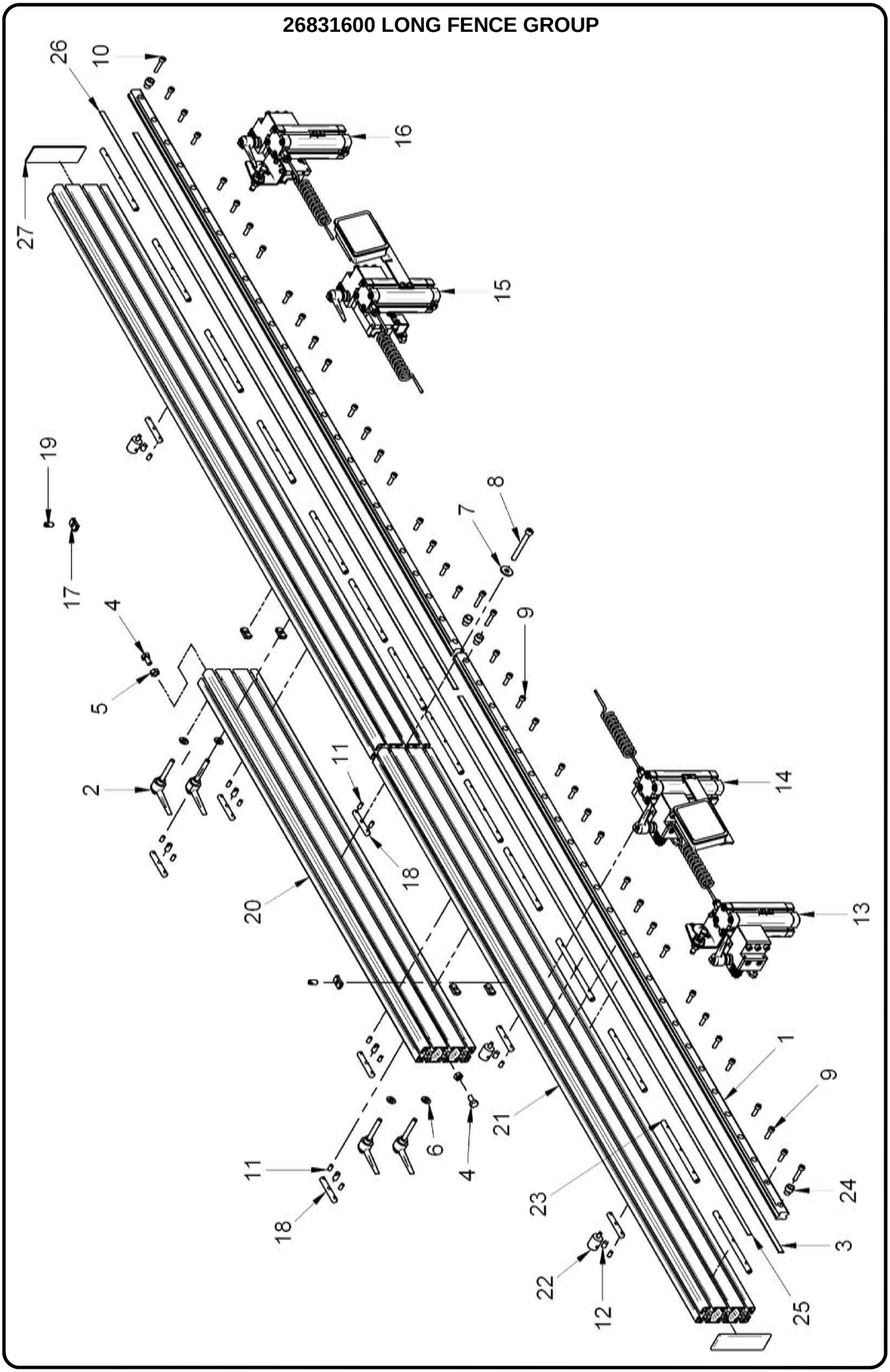

26831600 LONG FENCE GROUP

POS.	CODE	PART NAME	QUANTITY
1	00003051	SLIDE WAY EGR 25H (63615-2)	2
2	00004025	SNAP LEVER M8 L50	4
3	00004057	ELGO MAGNETIC BAND MB2025	2
4	00018405	SCREW VTCEI M8X16 UNI-5931	2
5	00018501	NUT M8 UNI-5588 6S	2
6	00018521	WASHER Ø8 UNI-6592	4
7	00018527	WASHER Ø8x24	1
8	00018656	SCREW VTCEI M8x70 UNI-5931	1
9	00040605	SCREW VTCEI M6x20	38
10	00040608	SCREW VTCEI M6x30	4
11	00140606	SCREW VTSTEI M6x12	13
12	00150805	SCREW VTSTEI 8x12	3
13	26850614	FENCE STOP UNIT	1
14	26850615	FENCE STOP UNIT	1
15	26850618	RH FENCE STOP UNIT	1
16	26850621	RH FENCE STOP UNIT	1
17	36050801	DOWEL	6
18	36054612	REFERENCE DOWEL	8
19	36090801	ALIGNMENT PIN	6
20	36850601	FENCE SUPPORT	1
21	36850613	FENCE	2
22	36850624	REFERENCE PIN	3
23	36850635	CYLINDRICAL DOWEL	14
24	36950305	RUNNER BLOCK	4
25	46050805	RH EXTENSION FENCE MILLIMETRED SCALE	1
26	46050806	LH EXTENSION FENCE MILLIMETRED SCALE	1
27	49900071	ITEM PLUG	2

26850614 / 26850621 FENCE STOP UNIT LH / RH

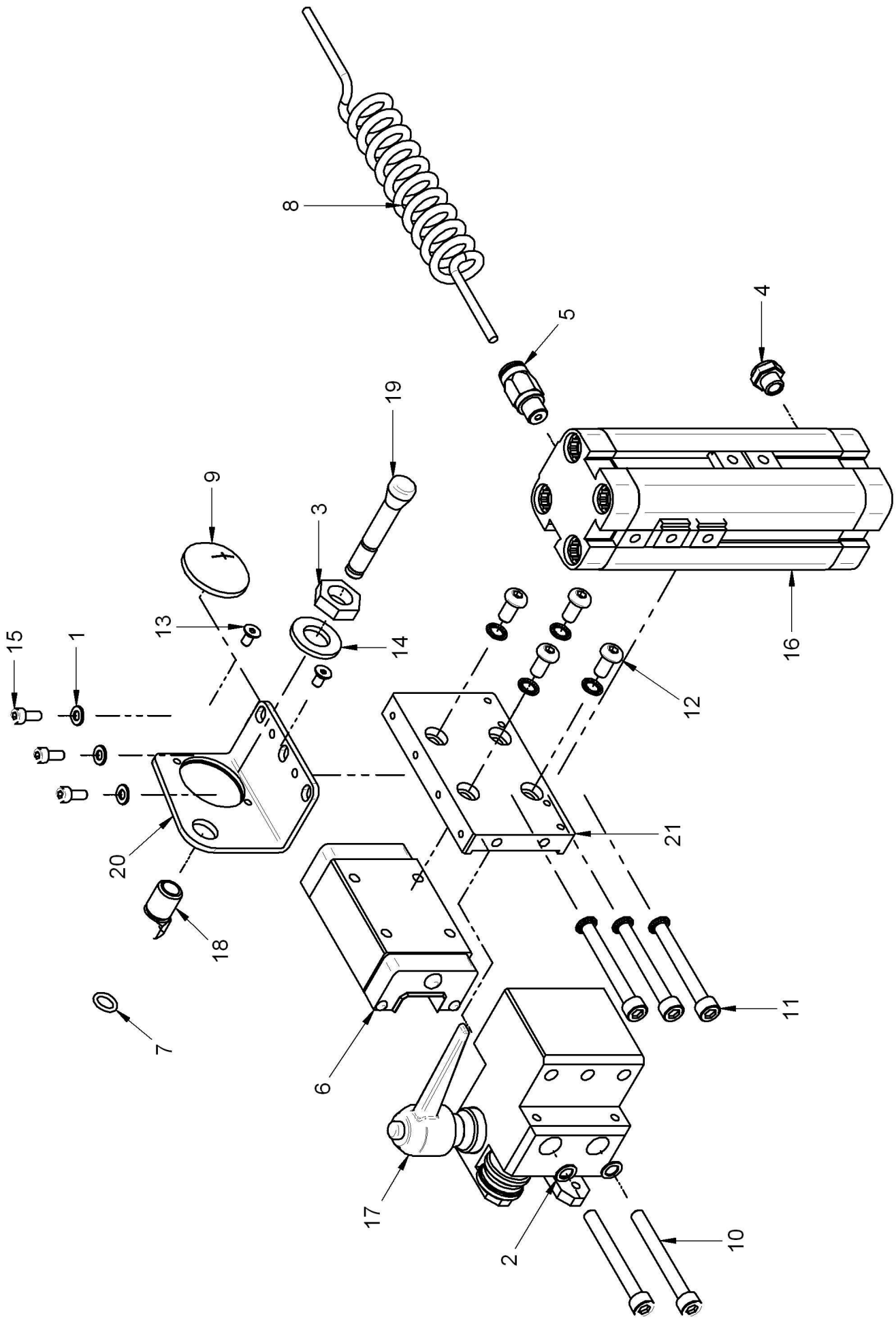

26850614 / 26850621 FENCE STOP UNIT LH / RH

POS.	CODE	PART NAME	QUANTITY
1	00000018	WASHER Ø4 UNI-6592	3
2	00000041	SCHNOR WASHER M6	9
3	00000116	NUT M12 UNI-5589 6S	1
4	00001109	PNMX SELENCER 1/8 COD.60518	1
5	00001155	PNMX FITTING ART.01-4-1_8	1
6	00003049	RUNNER BLOCK EGH 25C (A-Z0-H)	1
7	00003520	OR 2031	1
8	00004015	SPIRAL SR_4x2	1
9	00004325	LOBRE LENS Ø32 R20 F38	1
10	00018319	SCREW VTCEI M6x55	2
11	00018321	SCREW VTCEI M6x50	3
12	00018430	SCREW VTBCEI M6x12	4
13	00018439	SCREW VTSPEI M4x8 UNI-5933	2
14	00018523	WASHER Ø13 UNI-6592	1
15	00020403	SCREW VTCEI M4x10	3
16	26850604	REFERENCE CYLINDER	1
17	26850613	BRAKE	1
18	36050609	SUPPORT	1
19	36050610	SUPPORT	1
20	36850617	RUNNER BLOCK SUPPORT	1
21	36850621	RUNNER BLOCK SUPPORT	1

26850615 LH FENCE STOP

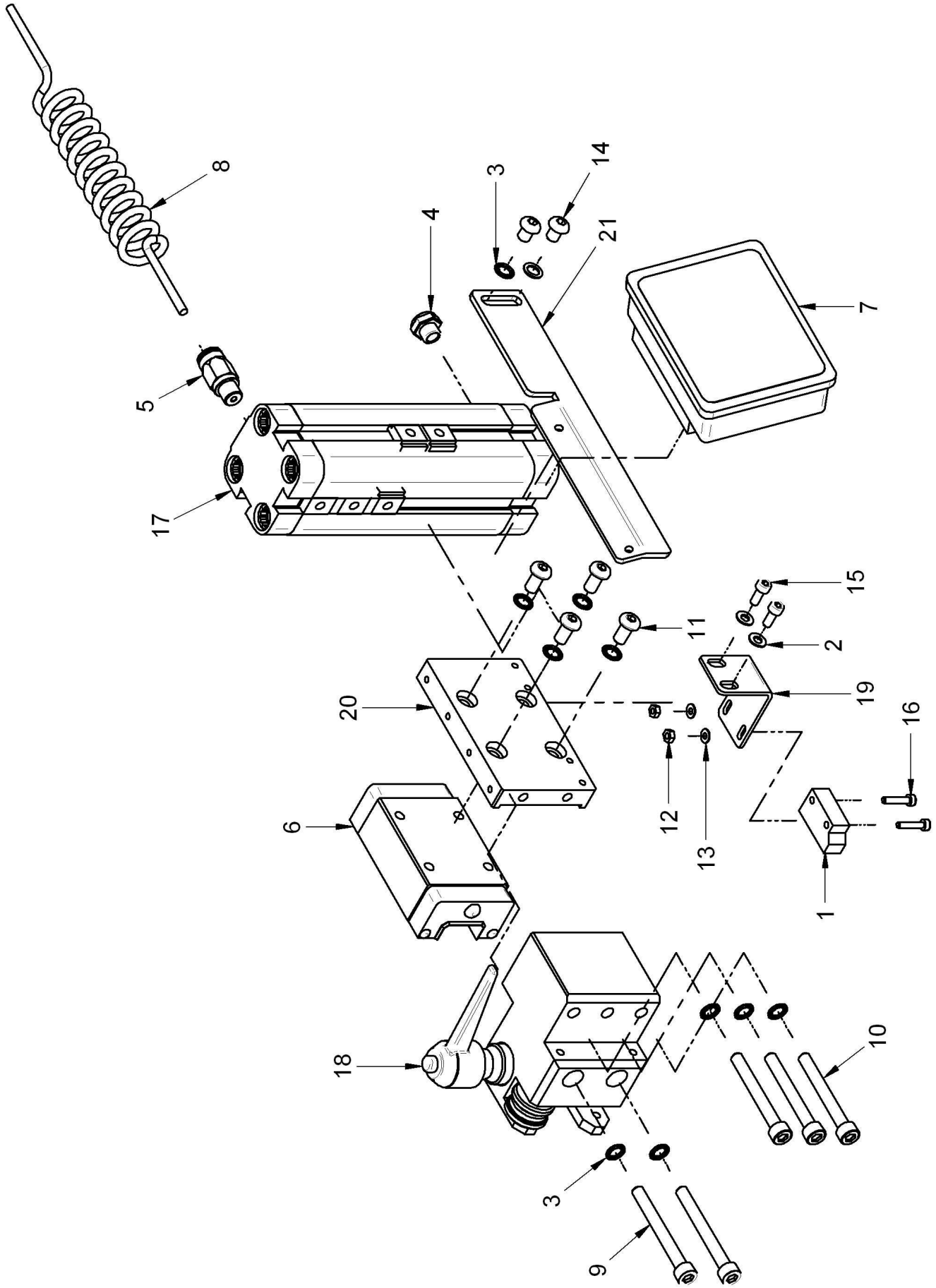

26850615 LH FENCE STOP

POS.	CODE	PART NAME	QUANTITY
1	-	ELGO SENSOR	1
2	00000018	WASHER Ø4 UNI-6592	2
3	00000041	SCHNOR WASHER M6	11
4	00001109	PNMX SELENCER 1/8 COD.60518	1
5	00001155	PNMX FITTING ART.01-4-1_8	1
6	00003049	RUNNER BLOCK EGH 25C (A-Z0-H)	1
7	00004003	ELGO DISPLAY MS Z-16 20-25 MM	1
8	00004015	SPIRAL_SR_4x2	1
9	00018319	SCREW VTCEI M6x55	2
10	00018321	SCREW VTCEI M6x50	3
11	00018430	SCREW VTBCEI M6x12	4
12	00018511	NUT M3 UNI5587	2
13	00018532	WASHER Ø3 UNI-6592	2
14	00018720	SCREW VTBCEI M6 x 8 ISO-7380	2
15	00020403	SCREW VTCEI M4x10	2
16	00020500	SCREW VTCEI M3x15	2
17	26850604	REFERENCE_CYLINDER	1
18	26850613	BRAKE	1
19	36850616	SENSOR SUPPORT	1
20	36850621	RUNNER BLOCK SUPPORT	1
21	36850643	DISPLAY SUPPORT	1

26850618 RH FENCE STOP

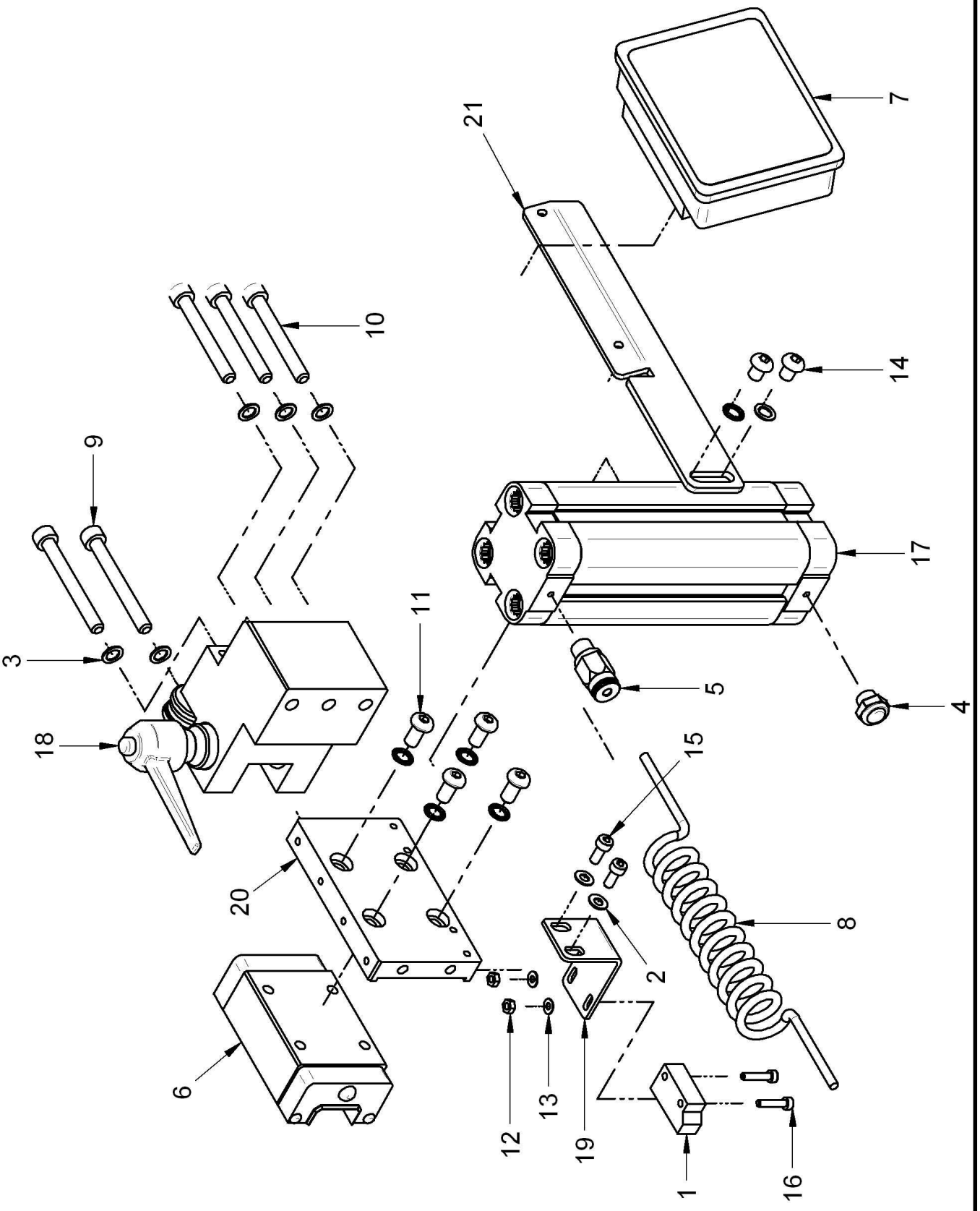

26850618 RH FENCE STOP

POS.	CODE	PART NAME	QUANTITY
1	-	ELGO SENSOR	1
2	00000018	WASHER Ø4 UNI-6592	2
3	00000041	SCHNOR WASHER M6	11
4	00001109	PNMX SELENCER 1/8 COD.60518	1
5	00001155	PNMX FITTING ART.01-4-1_8	1
6	00003049	RUNNER BLOCK EGH 25C (A-Z0-H)	1
7	00004003	ELGO DISPLAY MS Z-16 20-25 MM	1
8	00004015	SPIRAL_SR_4x2	1
9	00018319	SCREW VTCEI M6x55	2
10	00018321	SCREW VTCEI M6x50	3
11	00018430	SCREW VTBCEI M6x12	4
12	00018511	NUT M3 UNI5587	2
13	00018532	WASHER Ø3 UNI-6592	2
14	00018720	SCREW VTBCEI M6 x 8 ISO-7380	2
15	00020403	SCREW VTCEI M4x10	2
16	00020500	SCREW VTCEI M3x15	2
17	26850604	REFERENCE CYLINDER	1
18	26850617	HWIN LH MANUAL BRAKE	1
19	36850616	SENSOR SUPPORT	1
20	36850621	RUNNER BLOCK SUPPORT	1
21	36850645	RH DISPLAY SUPPORT	1

BORING SYSTEM 323TM MACHINE CODE 16835101

26835500 323TM HORIZONTAL HEAD HOLDER BLOCK GROUP

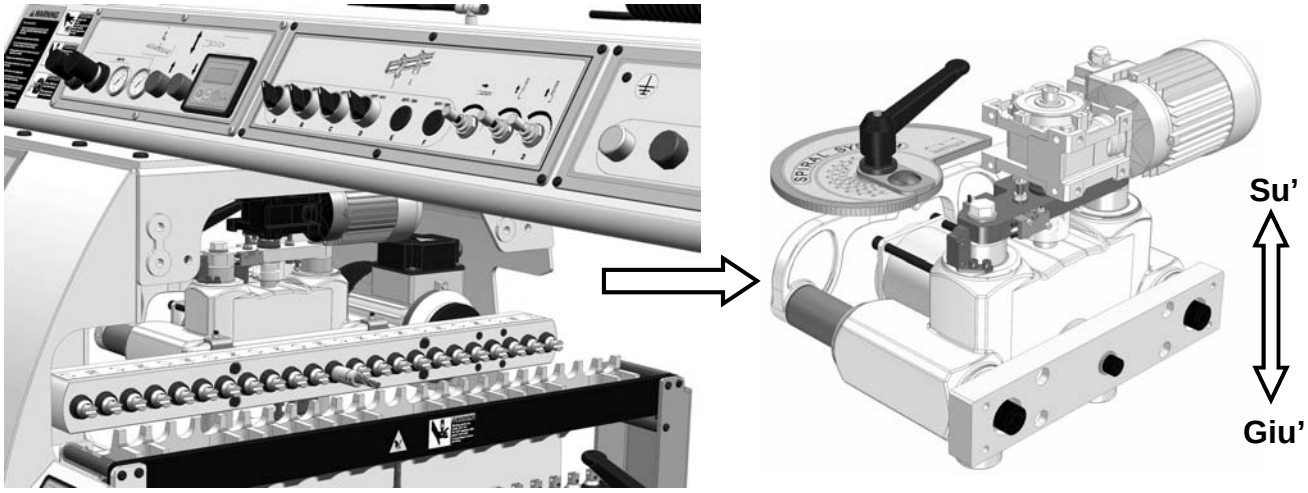

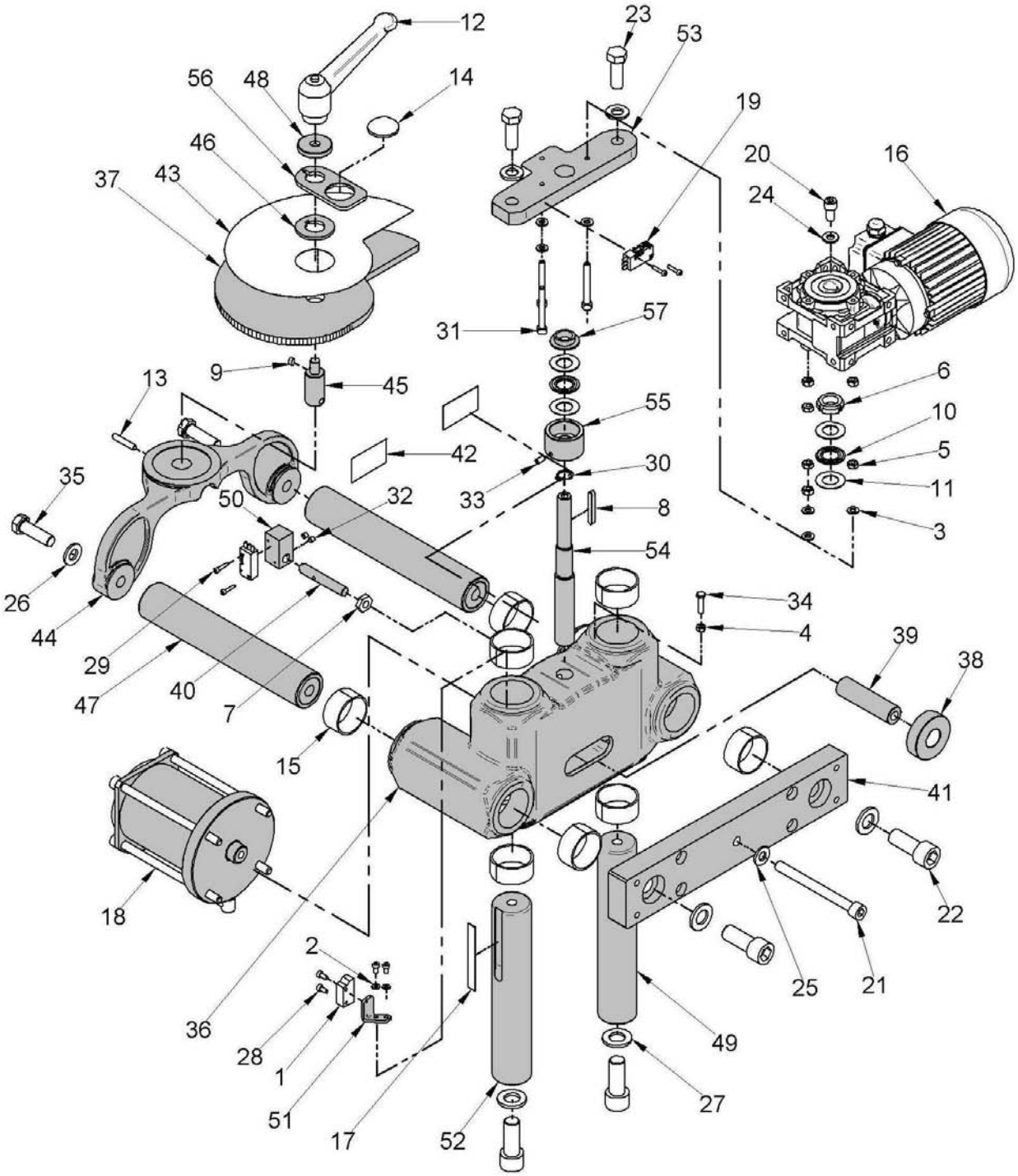

26835500 323TM HORIZONTAL HEAD HOLDER BLOCK GROUP

POS.	CODE	PART NAME	QUANTITY
1	----------	INTEGRATED ELGO SENSOR	1
2	00000018	WASHER Ø4 UNI-6592	2
3	00000019	WASHER Ø6 UNI-6592	6
4	00000104	NUT M5 UNI-5588 6S	1
5	00000107	NUT M6 UNI-5588 6S	6
6	00000168	SELF LOCKING NUT M17x1	1
7	00000180	NUT M10 UNI-5589 6S	1
8	00000221	PARALLEL KEY 5 x 5 L= 40 UNI6604 A	1
9	00000236	PARALLEL KEY 4x4x8 UNI 6604 A	1
10	00003455	INA BEARING AXK1730	2
11	00003456	INA RING AS 1730	4
12	00003934	BOTECO 522-104 M10	1
13	00004212	CYLINDRICAL PIN Ø6x30	1
14	00004321	LOBRE LENS Ø32 R20 F38	1
15	00005047	BEARING PAP 4020P10	8
16	00006020	MOTOVARIO NMRV030 + MOTOR MTB14PA4	1
17	00014060	ELGO MAGNETIC BAND	1
18	00015415	DRILL FEEDING CYLINDER	1
19	00015602	MATSUSHITA ABV1210618	2
20	00018307	SCREW VTCEI M8X16 UNI-5931	1
21	00018313	SCREW VTCEI M10X110 UNI-5931	1
22	00018314	SCREW VTCEI M16x40 UNI5931	4
23	00018403	SCREW VTE M12X35 UNI-5739	2
24	00018521	WASHER Ø8 UNI-6592	1
25	00018522	WASHER Ø10 UNI-6592	1
26	00018523	WASHER Ø13 UNI-6592	4
27	00018524	WASHER Ø17 UNI-6592	4
28	00020402	SCREW M4 x 8 - 5931	4
29	00020500	SCREW VTCEI M3x15	4
30	0003303	SEEGER E15	1
31	00040613	SCREW VTCEI M6x50	3
32	00130501	SCREW VSTEI M5X5 UNI-5923	2
33	00130503	SCREW VSTEI M5x10 UNI-5927	1
34	00330505	SCREW VTE M5x20 UNI 5739	1
35	00361020	SCREW VTE M12x40 UNI-5737	2
36	36000009	HEAD HOLDER	1
37	36000046	DEPTH STOP SPIRAL	1
38	36000053	RUBBER STOP	1
39	36000111	CYLINDER STEM EXTENSION	1
40	36003124	SPIRAL STOP	1
41	36050400	HEAD PLATE HOLDER	1
42	36050508	WARNING STICKER 50x30	2
43	36054403	SPIRAL PLATE	1
44	36090401	SPIRAL SUPPORT	1
45	36090405	SPIRAL HOLDER	1
46	36090406	THICKNESS LENS WASHER	1
47	36250407	HORIZONTAL ROLLING FENCE	2
48	36251403	SPIRAL WASHER	1
49	36800501	VERTICAL ROLLING FENCE	1
50	36800504	SUPPORT	1
51	36803109	SENSOR HOLDER	1
52	36803110	VERTICAL ROLLING FENCE	1
53	36803111	SCREW LIFTER CROSSBEAM	1
54	36803113	LIFTNG SCREW	1
55	36803114	SPACER	1
56	36830505	LENS HOLDER	1
57	41600004	SINTERIZING BUSCHING	1

26830100 323TM UPPER FRAME GROUP

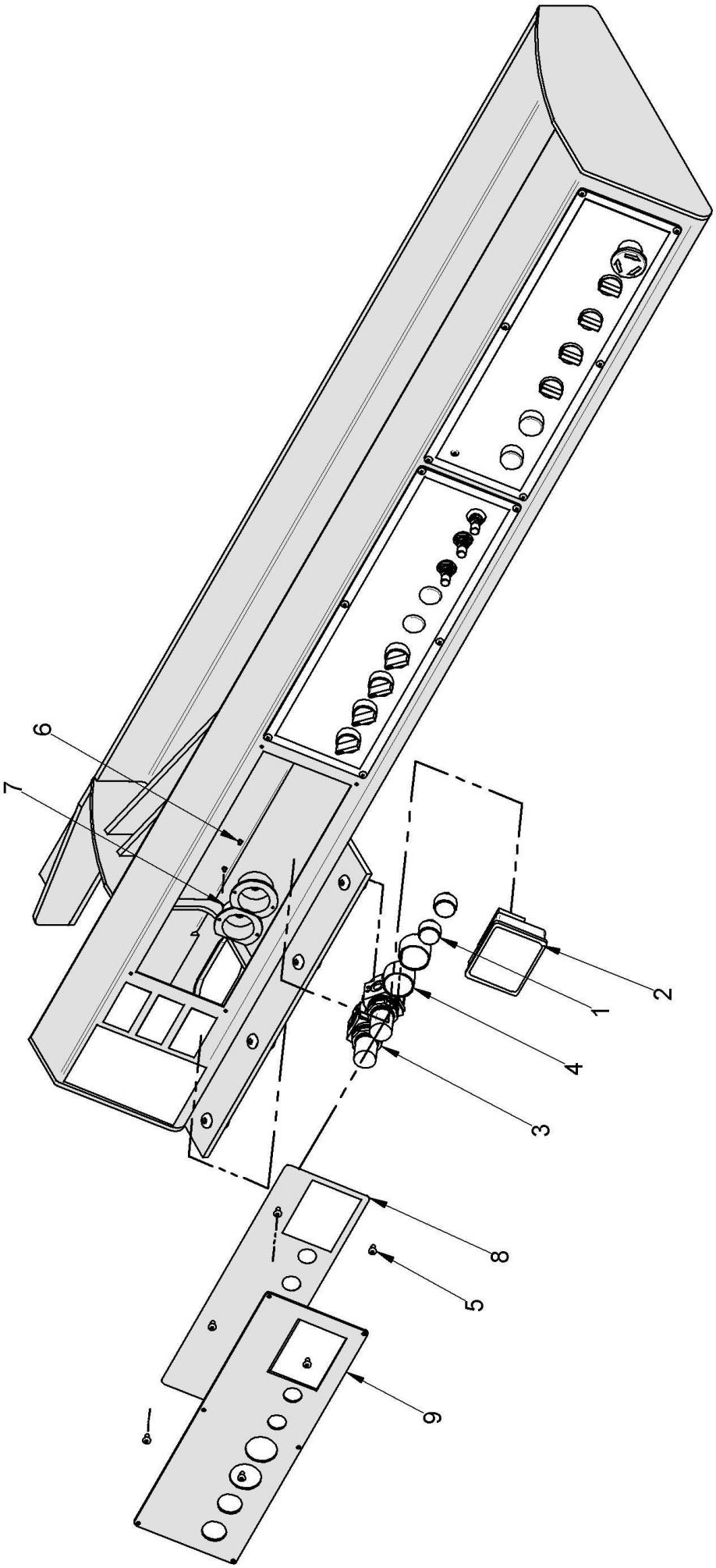

26830100 323TM UPPER FRAME GROUP

POS.	CODE	PART NAME	QUANTITY
1	----------	BUTTON	2
2	00004003	VISUAL DISPLAY ELGO MS Z-16 20-25 MM	1
3	00004069	PNMX PRESSURE REDUCTED 17102/BC	2
4	00015219	PNMX MANOMETER M40	2
5	00018558	SCREW VTBCEI M5x10 ISO 7380	6
6	00020400	SCREW VTC M3 x 5	4
7	36803112	MANOMETER HOLDER	2
8	46803105	HORIZONTAL HEAD PLATE	1
9	76803106	HORIZONTAL HEAD PANEL	1

Clamps Flow Regulator
(Vedi fig. A)

Horizontal Head Assembly
Movement

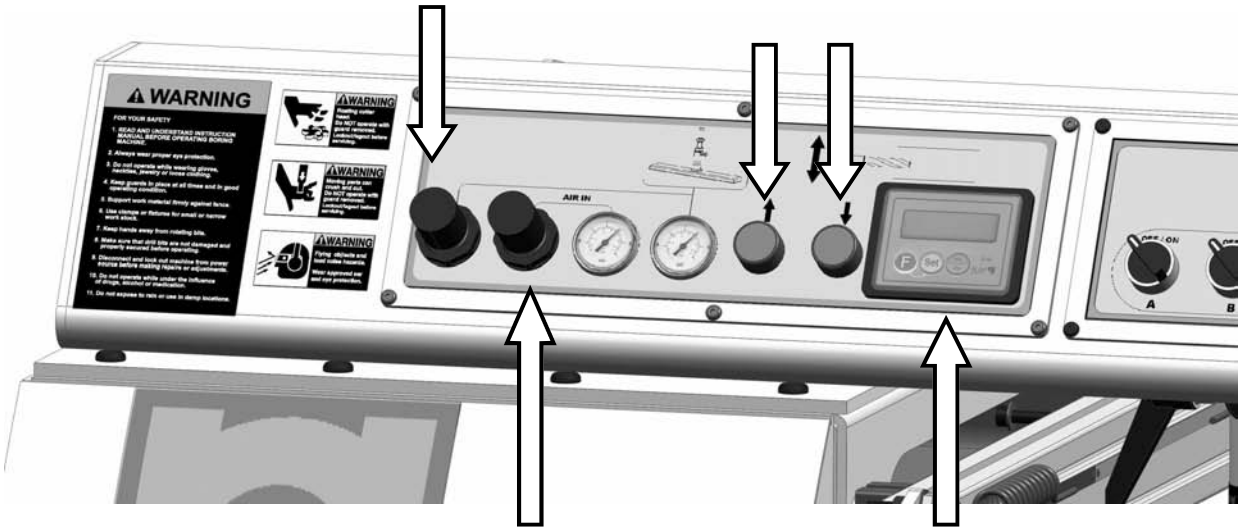

Main flow Regulator

Display

31. PNEUMATIC DIAGRAM

See the pneumatic diagram as described in figure.

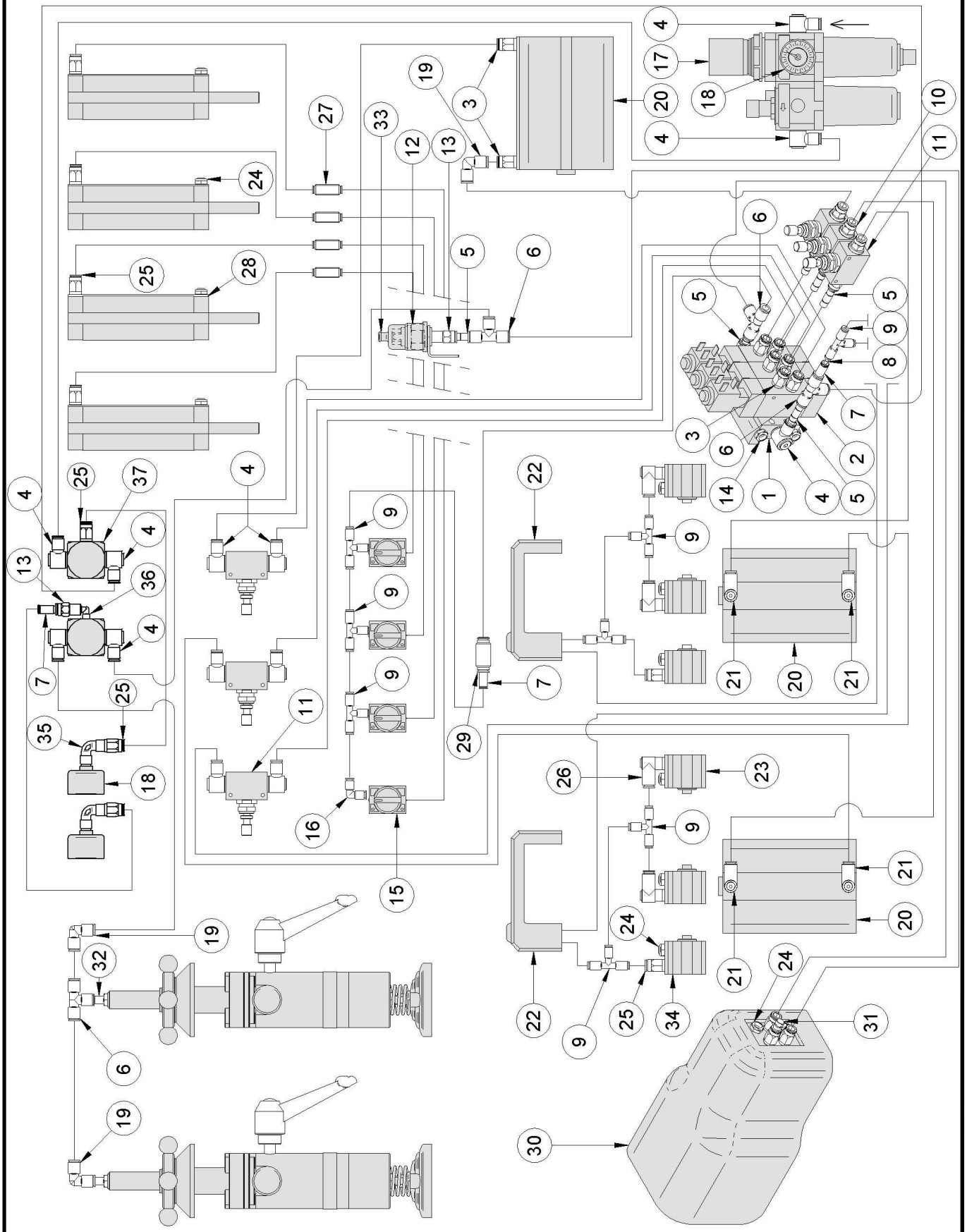

POS.	CODE	PART NAME	QUANTITY
1	00004071	PNMX 3 WAY MANIFOLD 488.03	1
2	00004016	PNMX ELECTROVALVE ECO 48852012	3
3	00001101	PNMX FITTING 01-8-1 8	8
4	00001108	PNMX FITTING 015-8-1 4	10
5	00001104	PNMX EXTENSION 07-8	6
6	00001102	PNMXT FITTING R5 8	4
7	00004067	PNMX REDUCER 08 08 04	2
8	00004068	PNMX EXTENSION 07 070400	1
9	00004065	PNMX T FITTING 05 4	6
10	00001013	PNMX FITTING 01 8 1 4	6
11	00015224	PNMX FLOW REGULATOR G1-4	6
12	00015237	PNMX PRESSURE SWITCH 250V	1
13	00001107	PNMX FEMALE STRAIGHT FITTING 02-8-1 8	1
14	00004064	PNMX SILENCER SFE14 1/4"BSP	4
15	00004013	PNMX SELECTOR 104 32 6 30 LC	4
16	00001114	PNMX L FITTING 04 4	1
17	00015231	PNMX REDUCTION FILTER 3/8 17206BBC	1
18	00015219	PNMX MANOMETER M40	1
19	00001110	PNMX L FITTINF 04-8	3
20	00015206	PNMX HEAD FEED CYLINDER	3
21	00001105	PNMX FITTING 015-8-1 8	4
22	00004001	PNMX HANDLE 105-32-6-40C	2
23	00004041	PNMX CYLINDER COD1503-25-10	4
24	00001109	PNMX WIRING SILENCER 1 8 COD.60518	12
25	00001155	PNMX FITTING 01-4-1 8	6
26	00015815	PNMX TURNING FITTING 15 150418	4
27	00004075	PNMX INTERMEDIATE STRAIGHT FITTING 03 4	4
28	00015213	PNMX CYLINDER 1561 32 75 01	4
29	00004070	PNMX INTERMEDIATE STRAIGHT FITTING Ø8	1
30	00015260	KPM PNEUMATIC PEDAL	1
31	00015902	PNMX TOP FITTING 09 090800	1
32	00001250	PNMX CYLINDRICAL FITTING 06 8 1-4	2
33	00015222	PNMX PRESSURE SWITCH CAP	1
34	00004014	PNMX CYLINDER COD1502-25-10	2
35	00015652	PNMX UNION L ART. 109 10918	2
36	00001172	PNMX UNION L G1/8 11518	1
37	00004069	PNMX PRESSURE REDUCTION 17102/BC	2

32. ELECTRIC DIAGRAM

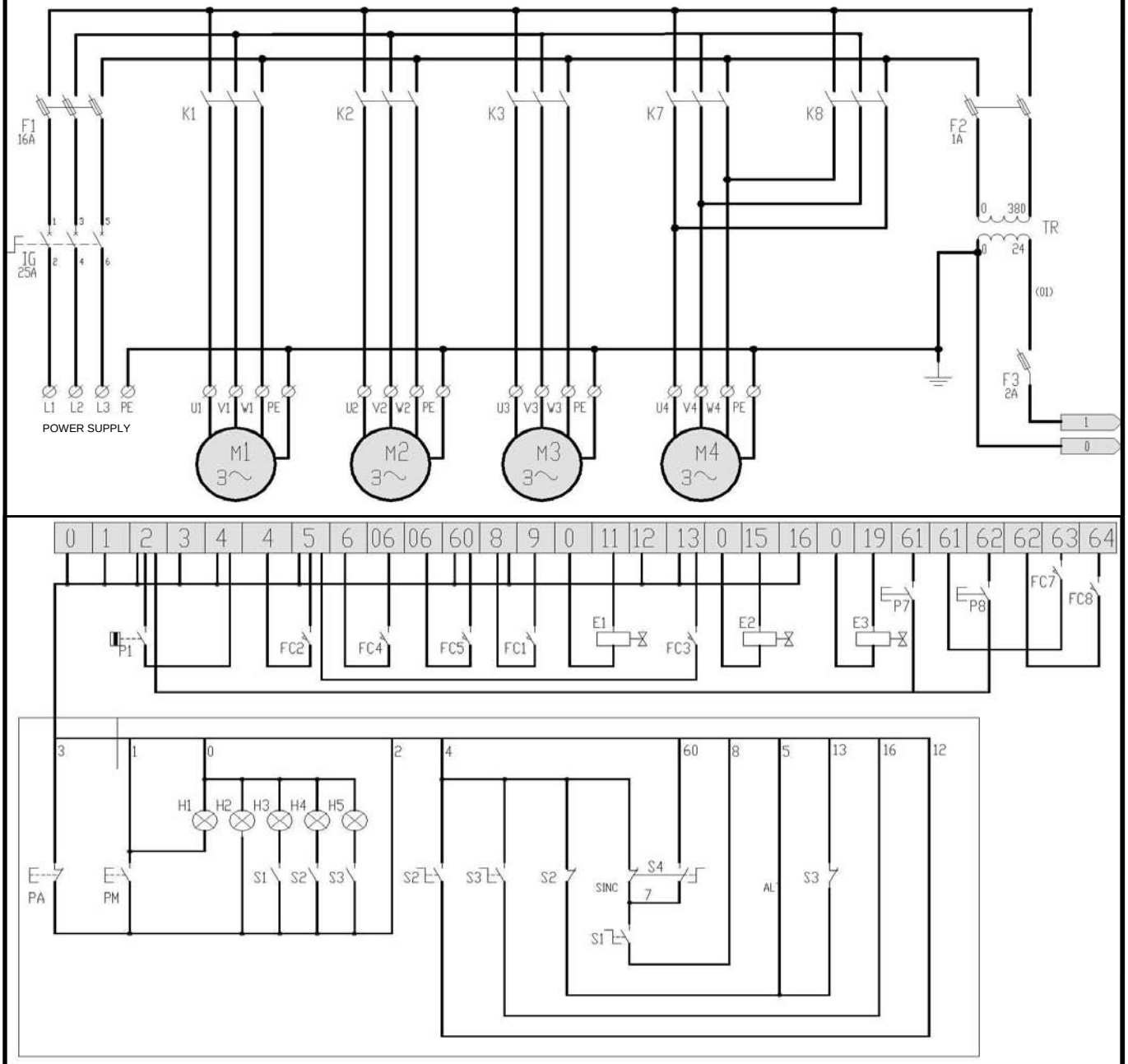

⏚	W2	U3	V3	W3	U4	V4	W4			⏚	8	8	9	11	12	13	13	15	16	19	60	60	61	61	62	62	63	64
	R	S	T	U1	V1	W1	U2	V2			0	0	0	0	1	2	2	2	3	4	4	4	5	5	5	6	06	06

QUANTITY	CODE	NAME	PART NAME
1			BOX 500x350x200
1		IG	YELLOW RED BADGE
1	LA2161753	IG	DOOR STOP SWITCH
1	WEPCH3X3832A	F1	FUSE HOLDER 3P 10x38 32A
1	WEPCH2X3832A	F2	FUSE HOLDER 2P 10x38 32A
1	WEPCH1X3832A	F3	FUSE HOLDER 1P 10x38 32A
3	LO11BF91024	K1-2-3	CONTACTOR 9A 1NO 24VAC
2	G48020	K2-3	CONTACT AUX
1	EZZDF2S8P	KR	RELAY BASE 10A 2 EXANGES
1	FI55328024	KR	RELAY 2 COUPLES CONTACT
3	DM10X3816A	F1	FUSE 10x38 16A
2	DM10X381A	F2	FUSE 10x38 1A
1	DM10X382A	F3	FUSE 10x38 2A
1	VE50VA	TR	TRANSF. 50VA 0-220-380/0-24-27
2	EZZA2S8P	T1-2	TIMER BASE OCTAL
2	LO31L48TB3S6	T1-2	TIMER 3s 24 V
2	EN16511417	MORS.	TERMINAL 6 mm
3	ZB5AK1233	S1-2-3	GREEN LIGHT SELECTOR 2P
3		S1-2-3	SUPPORT WITH LED
5	ZB5AZ101		CONTACT AUX NO+SUPPORT
4	ZBE101		CONTACT AUX NO
1	ZB5AD2	S4	BLACK SELECTOR 0-1
4	ZBE102		CONTACT AUX. NC
1	ZB5AS54	PA	PALM BUTTON
1		PA	EMERGENCY LABEL

QUANTITY	CODE	NAME	PART NAME
1	ZB5AV01	H1	COLORLESS GAUGE LAMP
2	BA9.30.2	H1-2-3-4-5	LAMP 30V 2W
1	ZB5AW31		WHITE LIGHT PUSH BUTTON
2	ZB5AV6		LAMP HOLDER
3	DEOM1900.16		CABLEPRESS PG16
12	DEOM1900.13		CABLEPRESS PG13,5
6	SITOBO5XMC		PLATEHOLDER
6	SITOVO1MC		PLATEHOLDER GLASS
2	11BF90124		CONTACTOR 24VAC 1NO
26	5670470530		CLIPS
1	TEZB5AA334		GONE UP PUSH-button
1	TEZB5AA335		COME DOWN PUSH-button
2	11G479048		FILTERS

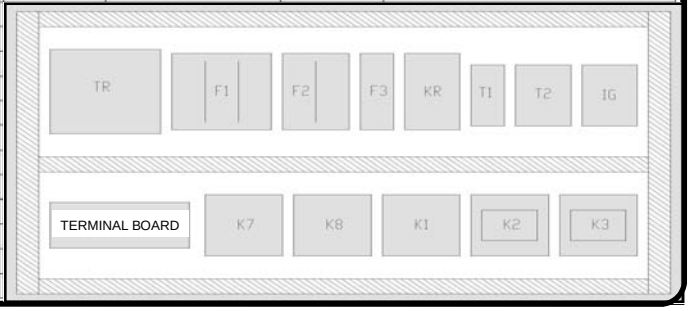

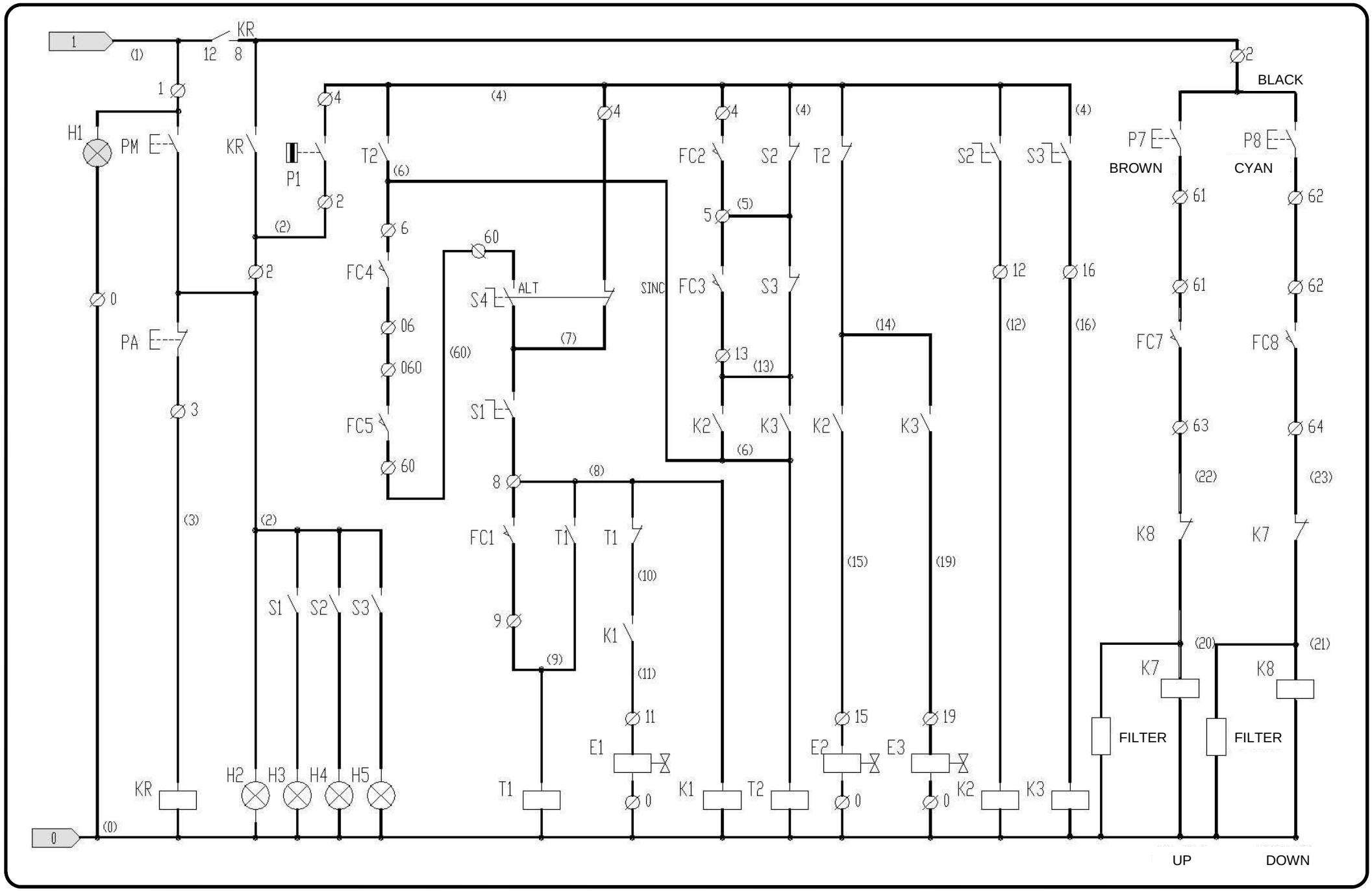
1
KR
12
8
(1)
H1
PM
PA
P1
T2
FC4
FC5
S4
ALT
SINC
S1
FC1
T1
K1
E1
H2
H3
H4
H5
FC2
S2
FC3
S3
K2
K3
E2
E3
P7
P8
BROWN
CYAN
BLACK
FC7
FC8
K8
K7
FILTER
UP
DOWN
0

33. SPARE PARTS REQUEST

ATTENTION! FILL IN DETAILS THIS FORM

Customer

……..

Address

……..

……..

Date …….

Telephone number

……..

Telefax

……..

MACHINE TYPE	SERIAL NUMBER	DELIVERY DATE	
GROUP CODE	**CODE**	**PART NAME**	**QUANTITY**

NOTES

……

……

……

N.B.: Please attach a copy of each table where the requested part is.

Page intentionally left blank

Maggi Engineering Woodworking machinery	Via delle Regioni, 299 50052 Certaldo (Fi) Italia Tel. +39 0571 63541 Fax. +39 0571 664275
Servizio commerciale	Tel. +39 0571 635488 Tel. +39 0571 635432 Tel. +39 0571 635405 Tel. +39 0571 635436
Servizio ricambi	Tel. +39 0571 635422 Fax. +39 0571 664043
E mail Internet	Maggi@maggi-engineering.com Www.maggi-engineering.com

Associato ACIMALL Member Company

TWT Tuscany Woodworking Technologies

Development by
MAGGI ENGINEERING